DATA SHEET	52103000
SKINDICHT® SM-M	valid from : 15.1.2016

The SKINDICHT® SM-M is a hexagonal brass counter nut with metric thread. Counter brass nuts are required in cases if glands have to be countered or thin housings allow only through borings.

Technical features:

Material	Brass, nickel-plated
Sizes	M12x1,5 up to M110x2 acc. to EN 60423

Norm references:

For more information please see our current catalogue.

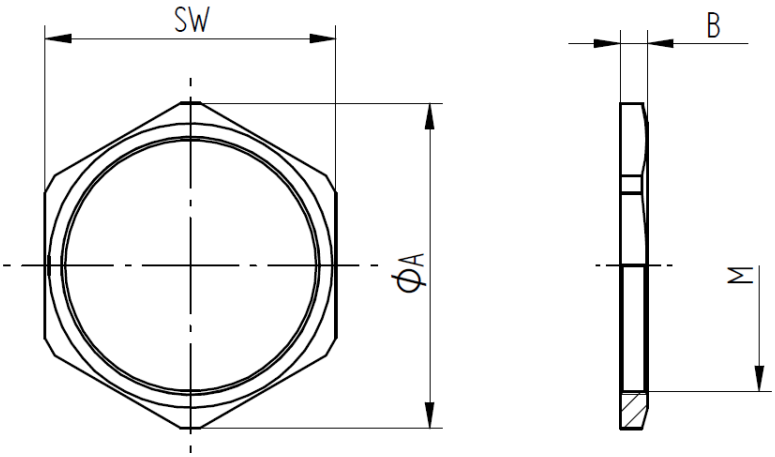

M	SW [mm]	Ø A [mm]	B [mm]	Article No.
M12x1,5	15	16,5	3	52103000
M16x1,5	19	20,9	3	52103010
M20x1,5	24	26,4	3,5	52103020
M25x1,5	30	33	4	52103030
M32x1,5	36	39,6	4	52103040
M40x1,5	46	50,6	5	52103050
M50x1,5	60	65	5	52103060
M63x1,5	70	77	5	52103070
M75x1,5	85	95	8	52103071
M90x2	102	114	10	52103072
M110x2	124	135	12	52103073