ROHS

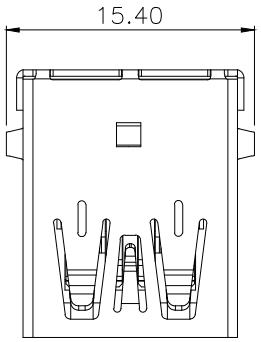

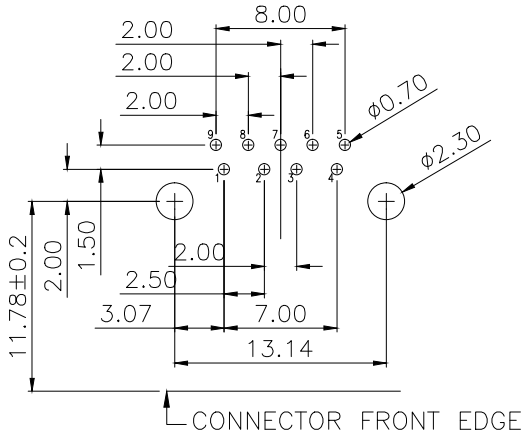

P.C.B LAYOUT
TOL:±0.05

NOTES:
1.MECHANICAL:
MATING: 35N MAX.
WITHDRAWAL: 10N MIN.
DURABILITY: 1500 CYCLES
2.ELECTRICAL:
CURRENT: 1.8A Maximum for pin1 and pin4, and 0.25A for all the other pin.
VOLTAGE: 30 Vac (rms)
WITHSTANDING VOLTAGE: 100V AC
CONTACT RESISTANCE:
30 mΩ (Max) initial for pin1 and pin4.
50 mΩ (Max) initial for all other contacts.
Maximum change of +10mΩ after environmental stresses.
Measure at 20 mV (Max) open circuit at 100 mA.
DIELECTRIC WITHSTANDING VOLTAGE: 100V AC(RMS)
INSULATION RESISTANCE: 100MΩ MIN.
3.ENVIRONMENTAL
TEMPERATURE RANGE −55°C ~ +85°C

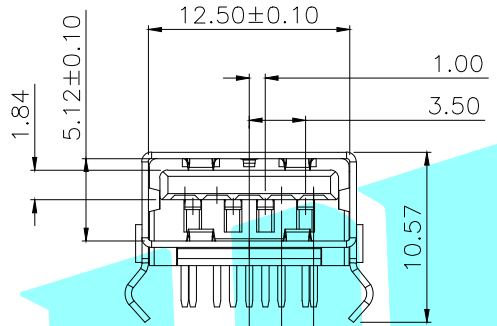

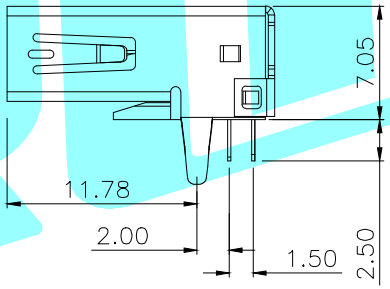

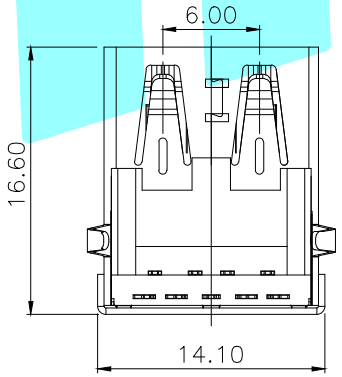

ECN NO.	REV.	DATE.	DESCRIPTION.	CHANGE.	CHECK.	APPRO.
———	A	———	NEW	———	———	———

APPROVALS		DATE	HRO韩荣® ELECTRONICS CO.,LTD		
DRAWN	LIUCAN	2020.11.30			
CHECKED			TITLE:	USB CONNECTOR	
APPROVALS			PART NO.	U−A−39DD−W−2	
TOLERANCES ARE	30~以上 ±0.30; 10~30 ±0.25; 5~10 ±0.20; ~ 5 ±0.15	ANGLE ±2°	UNIT: mm	SCALE: 1:1	PROJ:
			DRAWING NO.	———	SHEET 1 OF 1