SPEC

Spec No.	TQ3C-8EAF0-E1YAD20-01
Date	December 17, 2013

TYPE : TCG035QVLPAAFA-AA00

< 3.5 inch QVGA transmissive color TFT
with LED backlight / and touch panel>

CONTENTS

1. Application
2. Construction and outline
3. Mechanical specifications
4. Absolute maximum ratings
5. Electrical characteristics
6. Optical characteristics
7. Interface signals
8. Input timing characteristics
9. Backlight characteristics
10. Design guidance for analog touch panel
11. Lot number identification
12. Warranty
13. Precautions for use
14. Reliability test data
15. Outline drawing

KYOCERA DISPLAY CORPORATION

This specification is subject to change without notice.
Consult Kyocera before ordering.

Original Issue Date	Designed by: Engineering dept.			Confirmed by: QA dept.	
	Prepared	Checked	Approved	Checked	Approved
July 12, 2012	K. Mori	Y. Yamazaki	M. Fujitani	O. Sato	I. Hamada

KYOCERA

Warning

1. This Kyocera LCD module has been specifically designed for use only in electronic devices and industrial machines in the area of audio control, office automation, industrial control, home appliances, etc. The module should not be used in applications where the highest level of safety and reliability are required and module failure or malfunction of such module results in physical harm or loss of life, as well as enormous damage or loss. Such fields of applications include, without limitation, medical, aerospace, communications infrastructure, atomic energy control. Kyocera expressly disclaims any and all liability resulting in any way to the use of the module in such applications.

2. Customer agrees to indemnify, defend and hold Kyocera harmless from and against any and all actions, claims, damages, liabilities, awards, costs, and expenses, including legal expenses, resulting from or arising out of Customer's use, or sale for use, or Kyocera modules in applications.

Caution

1. Kyocera shall have the right, which Customer hereby acknowledges, to immediately scrap or destroy tooling for Kyocera modules for which no Purchase Orders have been received from the Customer in a two-year period.

Revision record

Date	Designed by : Engineering dept.			Confirmed by : QA dept.	
	Prepared	Checked	Approved	Checked	Approved
December 17, 2013	K. Mori	Y. Yamazaki	M. Fujitani	O. Sato	I. Hamano

Rev.No.	Date	Page	Descriptions
01	Dec 17, 2013	-	Change name of company =KYOCERA CORPORATION LCD DIVISION →KYOCERA DISPLAY CORPORATION
		10	8-1. LCD (Necessity of V・HSYNC) ~Change figure (Correct errors)

1. Application

This document defines the specification of TCG035QVLPAAFA-AA00. (RoHS Compliant)

2. Construction and outline

LCD	: Transmissive color dot matrix type TFT
Backlight system	: LED
Polarizer	: Anti-Glare treatment
Additional circuit	: Timing controller, Power supply (3.3V input) (without constant current circuit for LED Backlight)
Touch panel	: Analog type, Non-Glare treatment

3. Mechanical specifications

3-1. LCD

Item	Specification	Unit
Outline dimensions 1)	76.9(W)×63.9(H)×6.3(D)	mm
Active area	70.56(W)×52.92(H) (8.8cm/3.5 inch(Diagonal))	mm
Dot format	320×(R,G,B)(W)×240(H)	dot
Dot pitch	0.0735(W)×0.2205(H)	mm
Base color 2)	Normally White	-
Mass	50	g

1) Projection not included. Please refer to outline for details.
2) Due to the characteristics of the LCD material, the color varies with environmental temperature.

3-2. Touch panel

Item	Specification	Unit
Input	Radius-0.8 stylus or Finger	-
Actuation Force	0.05～0.8	N
Transmittance	Typ.80	%
Surface hardness	Pencil hardness 2H or more according	-

4. Absolute maximum ratings

4-1. Electrical absolute maximum ratings

Item	Symbol	Min.	Max.	Unit
Supply voltage	V_{DD}	-0.3	4.0	V
Input signal voltage 1)	V_{IN}	-0.3	4.0	V
LED forward current 2) 3)	IF	-	30	mA
Supply voltage for touch panel	V_{TP}	0	6.0	V
Input current of touch panel	I_{TP}	0	0.5	mA

1) Input signal : CK, R0～R7, G0～G7, B0～B7, H_{SYNC}, V_{SYNC}, ENAB, REST, CSB, SCK, SDI
2) For each "AN-CA"
3) Do not apply reversed voltage.

4-2. Environmental absolute maximum ratings

Item	Symbol	Min.	Max.	Unit
Operating temperature 1)	T_{OP}	-20	70	°C
Storage temperature 2)	T_{STO}	-30	80	°C
Operating humidity 3)	H_{OP}	10	4)	%RH
Storage humidity 3)	H_{STO}	10	4)	%RH
Vibration	-	5)	5)	-
Shock	-	6)	6)	-

1) Operating temperature means a temperature which operation shall be guaranteed. Since display performance is evaluated at 25°C, another temperature range should be confirmed.
2) Temp. = -30°C＜48h , Temp. = 80°C＜168h
Store LCD at normal temperature/humidity. Keep them free from vibration and shock.
An LCD that is kept at a low or a high temperature for a long time can be defective due to other conditions, even if the low or high temperature satisfies the standard.
(Please refer to "Precautions for Use" for details.)

3) Non-condensing
4) Temp.≦40°C, 85%RH Max.
Temp.＞40°C, Absolute humidity shall be less than 85%RH at 40°C.
5)

Frequency	10～55 Hz	Acceleration value (0.3～9 m/s²)
Vibration width	0.15mm	
Interval	10-55-10 Hz 1 minutes	

2 hours in each direction X, Y, Z (6 hours total)
EIAJ ED-2531

6) Acceleration: 490 m/s², Pulse width: 11 ms
3 times in each direction: ±X, ±Y, ±Z
EIAJ ED-2531

5. Electrical characteristics

5-1. LCD

Temp. = -20～70°C

Item	Symbol	Condition	Min.	Typ.	Max.	Unit
Supply voltage 1)	V_{DD}	-	3.0	3.3	3.6	V
Current consumption	I_{DD}	2)	-	8.0	11.3	mA
Permissive input ripple voltage	V_{RP}	V_{DD}=3.3V	-	-	100	mVp-p
Input signal voltage 3)	V_{IL}	"Low" level	0	-	0.2V_{DD}	V
	V_{IH}	"High" level	0.8V_{DD}	-	V_{DD}	V

1) V_{DD}-turn-on conditions

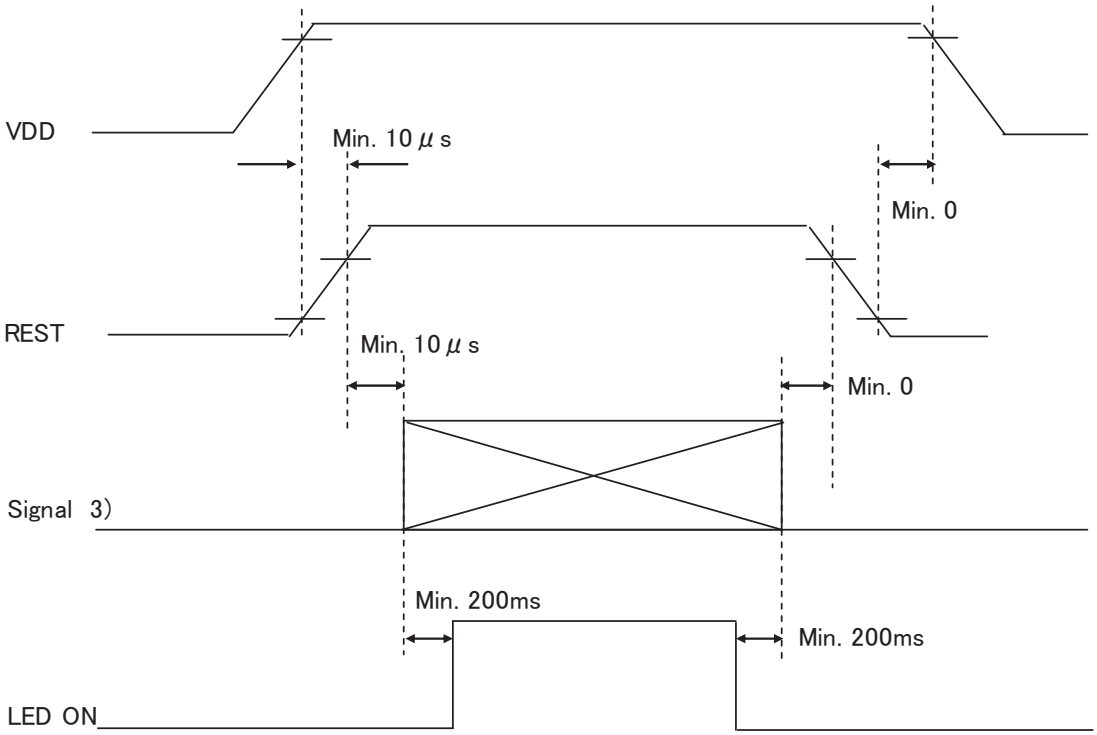

2) I_{DD} measuring conditions

Typ. : V_{DD}=3.3V, Temp. = 25°C

Max. : V_{DD}=3.6V, Temp. = 70°C

Display pattern

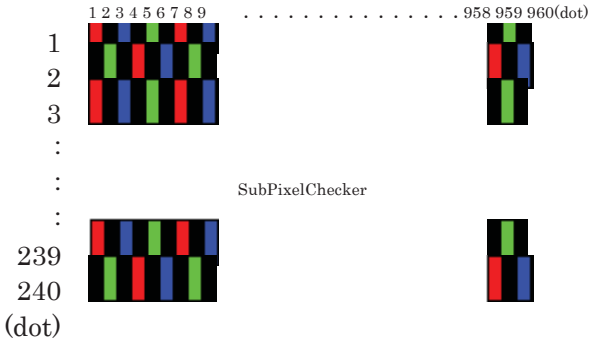

3) Input signal : CK, R0～R7, G0～G7, B0～B7, H_{SYNC}, V_{SYNC}, ENAB, REST, CSB, SCK, SDI

5-2. Touch panel

Item	Specification
Supply voltage for touch panel	5.0V
Terminal resistance	xL～xR : 200Ω～1,000Ω
	yU～yL : 200Ω～1,000Ω
Linearity	less than ±1.5%
Insulation resistance	100MΩ or more at DC25V

6. Optical characteristics

Measuring spot = ϕ 6.0mm, Temp. = 25°C

Item		Symbol	Condition	Min.	Typ.	Max.	Unit
Response time	Rise	τ_r	$\theta = \phi = 0°$	-	8	-	ms
	Down	τ_d	$\theta = \phi = 0°$	-	22	-	ms
Viewing angle range View direction : 12 o'clock (Gray inversion)		θ UPPER	CR≧10	-	80	-	deg.
		θ LOWER		-	60	-	
		ϕ LEFT		-	80	-	deg.
		ϕ RIGHT		-	80	-	
Contrast ratio		CR	$\theta = \phi = 0°$	700	1,000	-	-
Brightness		L	IF=15mA/Line	220	320	-	cd/m²
Chromaticity coordinates	Red	x	$\theta = \phi = 0°$	0.550	0.600	0.650	-
		y		0.300	0.350	0.400	
	Green	x	$\theta = \phi = 0°$	0.295	0.345	0.395	
		y		0.530	0.580	0.630	
	Blue	x	$\theta = \phi = 0°$	0.110	0.160	0.210	
		y		0.070	0.120	0.170	
	White	x	$\theta = \phi = 0°$	0.265	0.315	0.365	
		y		0.280	0.330	0.380	

6-1. Definition of contrast ratio

$$\text{CR(Contrast ratio)} = \frac{\text{Brightness with all pixels "White"}}{\text{Brightness with all pixels "Black"}}$$

6-2. Definition of response time

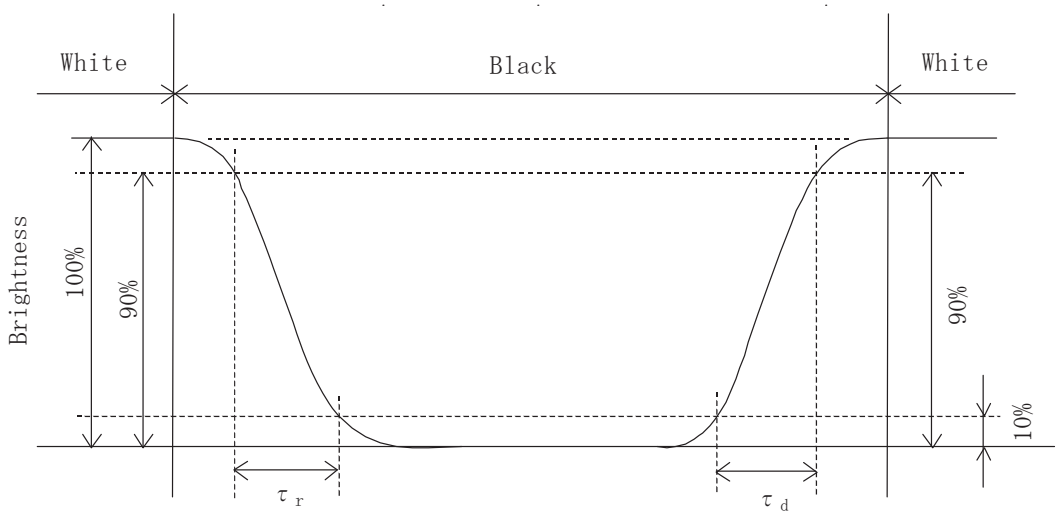

6-3. Definition of viewing angle

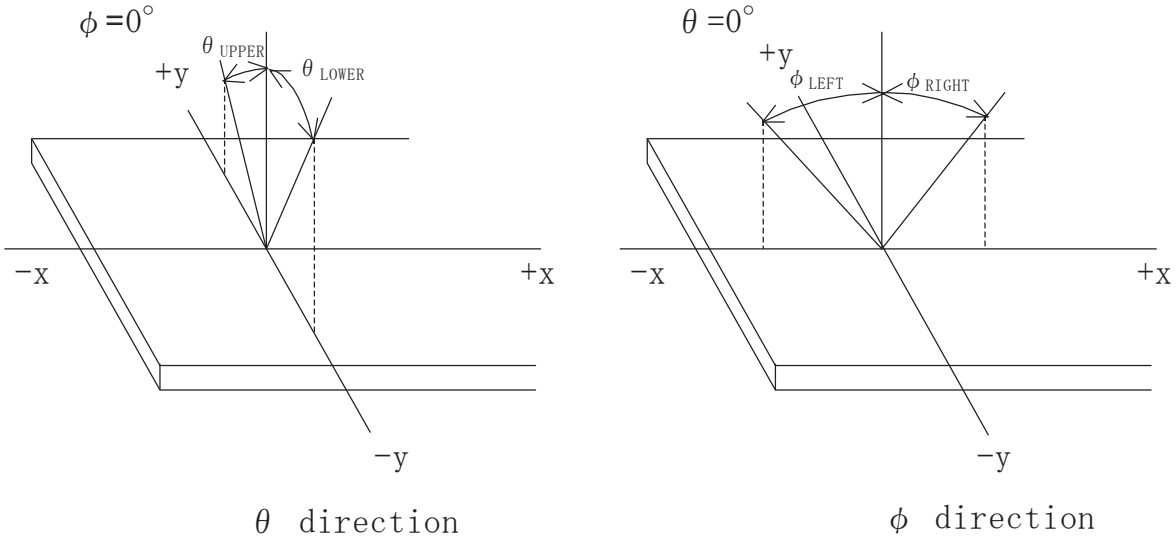

θ direction　　ϕ direction

6-4. Brightness measuring points

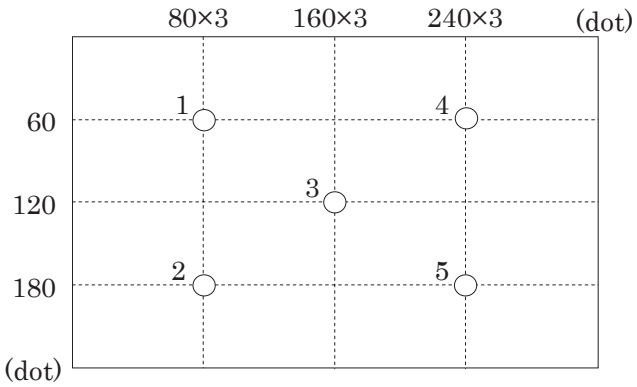

1) Rating is defined as the white brightness at center of display screen(3).
2) 5 minutes after LED is turned on. (Ambient Temp.=25℃)

7. Interface signals

7-1. LCD

No.	Symbol	Description	Note
1	GND	GND	
2	GND	GND	
3	V_{DD}	3.3V power supply	
4	V_{DD}	3.3V power supply	
5	R0	RED data signal(LSB)	
6	R1	RED data signal	
7	R2	RED data signal	
8	R3	RED data signal	
9	R4	RED data signal	
10	R5	RED data signal	
11	R6	RED data signal	
12	R7	RED data signal(MSB)	
13	G0	GREEN data signal(LSB)	
14	G1	GREEN data signal	
15	G2	GREEN data signal	
16	G3	GREEN data signal	
17	G4	GREEN data signal	
18	G5	GREEN data signal	
19	G6	GREEN data signal	
20	G7	GREEN data signal(MSB)	
21	B0	BLUE data signal(LSB)	
22	B1	BLUE data signal	
23	B2	BLUE data signal	
24	B3	BLUE data signal	
25	B4	BLUE data signal	
26	B5	BLUE data signal	
27	B6	BLUE data signal	
28	B7	BLUE data signal(MSB)	
29	GND	GND	
30	CK	Clock	
31	CSB	Select signal(SPI)	
32	H_{SYNC}	Horizontal synchronous signal(negative)	
33	V_{SYNC}	Vertical synchronous signal(negative)	
34	ENAB	Data Enable (Low signal only)	
35	GND	GND	
36	REST	Reset signal	
37	SCK	Clock (SPI)	
38	SDI	Data signal(SPI)	
39	GND	GND	
40	NC	NC(Open)	
41	NC	NC(Open)	
42	NC	NC(Open)	
43	NC	NC	
44	GND	GND	
45	CA1	Cathode1	
46	NC	NC	
47	AN1	Anode1	
48	AN2	Anode2	
49	NC	NC	
50	CA2	Cathode2	

LCD side connector : 0.5mm pitch
Recommended matching connector : 04 6240 050 023 846+ (KYOCERA Connector Products)

7-2. Touch panel

No.	Symbol	Description
1	xR	x-Right terminal
2	yL	y-Lower terminal
3	xL	x-Left terminal
4	yU	y-Upper terminal

Touch panel side connector : 1mm pitch
Recommended matching connector : TBD

8. Input timing characteristics

8-1. LCD (Necessity of V･HSYNC)

Item		Symbol	Min.	Typ.	Max.	Unit	Note
Clock (CK)	Frequency	1/Tc	-	6.5	-	MHz	
	Period	Tc	-	154	-	ns	
	High time	Tch	50	-	-	ns	
	Low time	Tcl	50	-	-	ns	
Data (R0～R5,G0～G5, B0～B5)	Set up time	Tds	12	-	-	ns	
	Hold time	Tdh	12	-	-	ns	
Horizontal sync. Signal (HSYNC)	Set up time	Ths	20	-	-	ns	
	Hold time	Thh	20	-	-	ns	
	Frequency	1/Th	-	14.9	-	kHz	
	Period	Th	-	408	-	Tc	
	Front porch	Thf	-	20	-	Tc	
	Back porch	Thb	-	68	-	Tc	
Horizontal display period		Thd		320		Tc	
Vertical sync. Signal (VSYNC)	Set up time	Tvs	20	-	-	ns	
	Hold time	Tvh	20	-	-	ns	
	Period	Tv	-	262	-	Th	
	Front porch	Tvf	-	4	-	Th	
	Back porch	Tvb	-	18	-	Th	
Vertical display period		Tvd		240		Th	
Synchronous signal phase lag		Thv	0	-	240	Tc	
Refresh rate		1/Tv	-	60	-	Hz	
Reset signal (REST)	Pulse width	Tres	10	-	-	μs	

1) In case of lower frequency, the deterioration of the display quality, flicker etc., may occur.

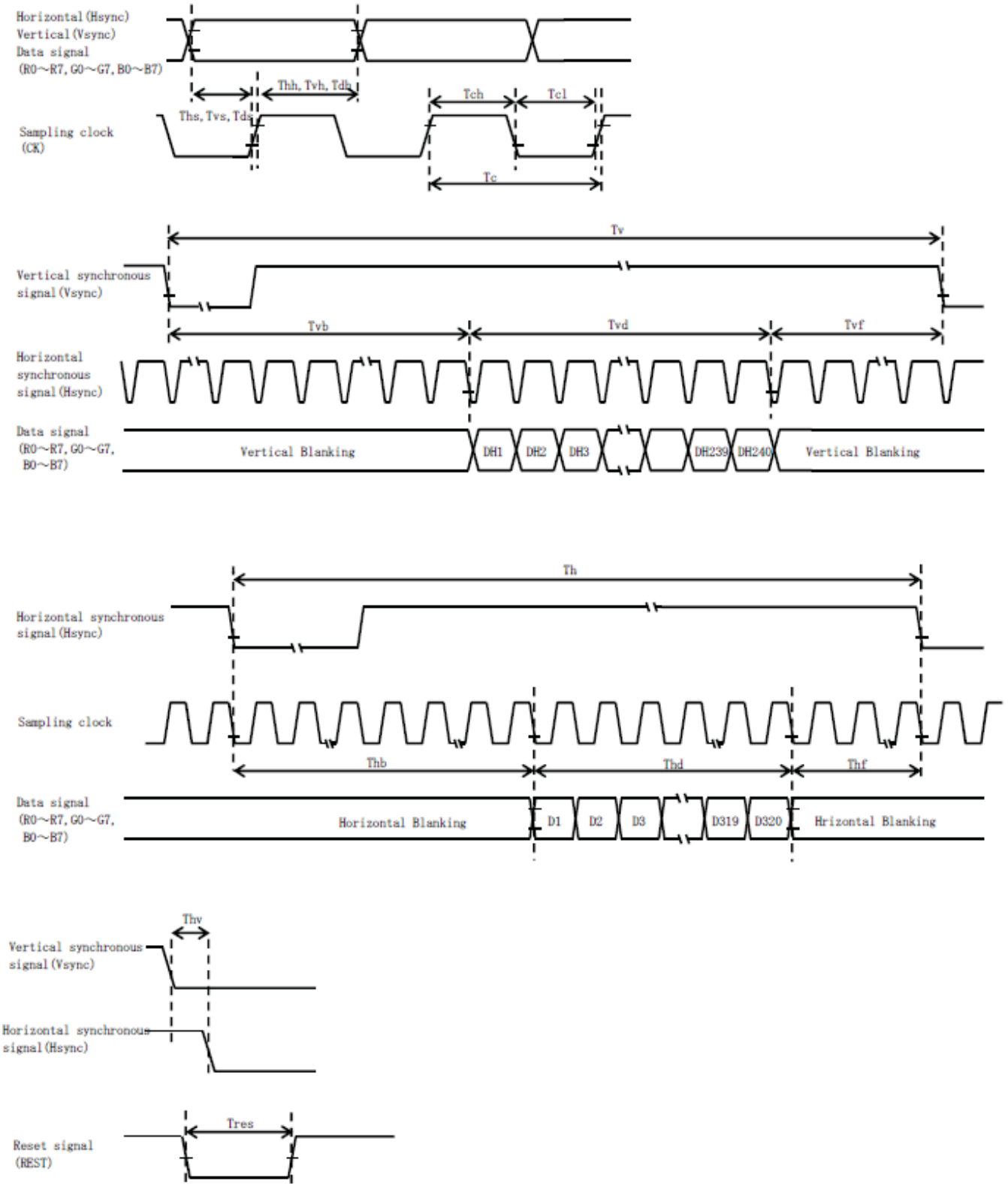
Horizontal (Hsync)
Vertical (Vsync)
Data signal
(R0~R7, G0~G7, B0~B7)
Thh, Tvh, Tdh
Tch
Tcl
Ths, Tvs, Tds
Sampling clock
(CK)
Tc
Tv
Vertical synchronous signal (Vsync)
Tvb
Tvd
Tvf
Horizontal synchronous signal (Hsync)
Data signal
(R0~R7, G0~G7, B0~B7)
Vertical Blanking
DH1
DH2
DH3
DH239
DH240
Vertical Blanking
Th
Horizontal synchronous signal (Hsync)
Sampling clock
Thb
Thd
Thf
Data signal
(R0~R7, G0~G7, B0~B7)
Horizontal Blanking
D1
D2
D3
D319
D320
Hrizontal Blanking
Thv
Vertical synchronous signal (Vsync)
Horizontal synchronous signal (Hsync)
Tres
Reset signal
(REST)

8-2. SPI

Item		Symbol	Min.	Typ.	Max.	Unit	Note
Clock (SCK)	Period	Tsc	50	-	-	ns	
	High time	Tsch	25	-	-	ns	
	Low time	Tscl	25	-	-	ns	
Select signal (CSB)	Set up time	Tcss	50	-	-	ns	
	Hold time	Tcsh	50	-	-	ns	
	High time	Tcs	50	-	-	ns	
Data signal (SDI)	Set up time	Tds	15	-	-	ns	
	Hold time	Tdh	15	-	-	ns	

First Transmission (Register) Ex.R01h

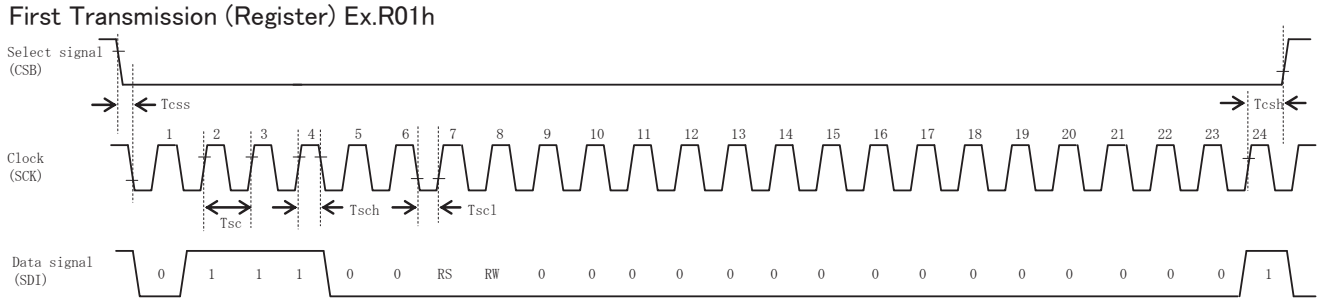

Second Transmission (Data) Ex.7300

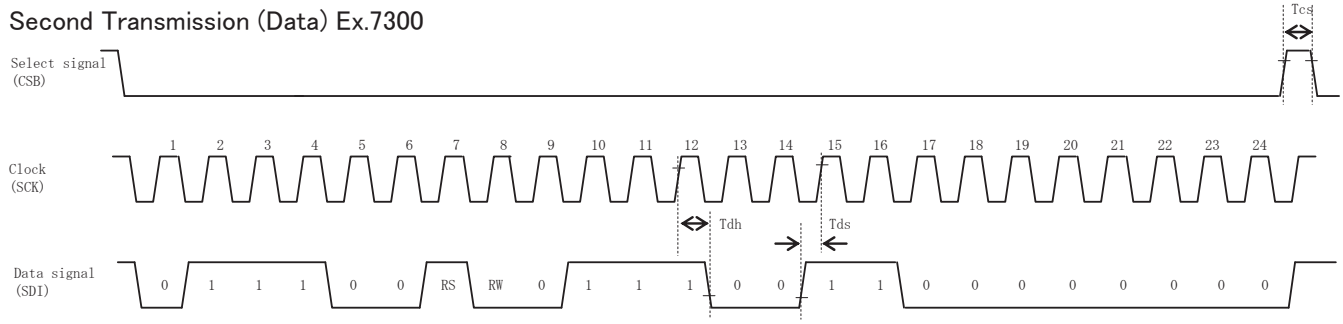

Transmission Format

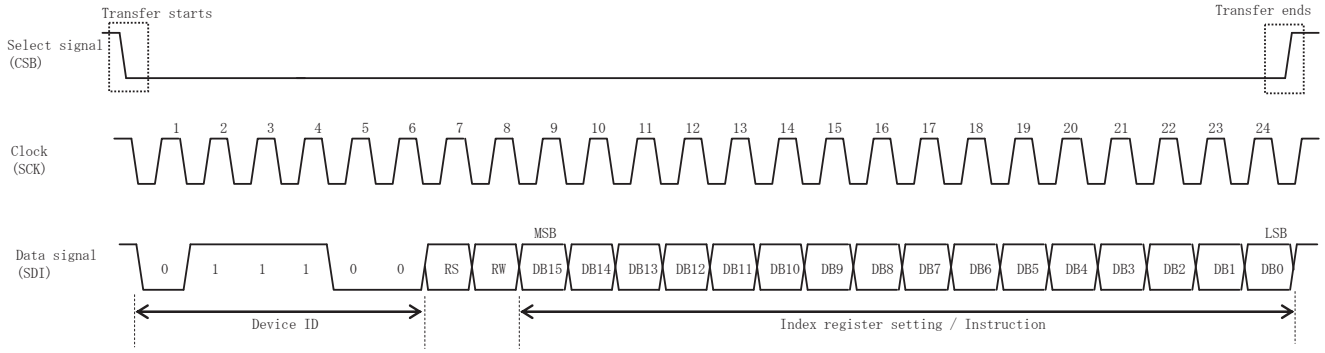

8-3. Register

Reg#	Hex Code	Note
R01h	7300	
R02h	0200	
R03h	6464	
R04h	04C7	
R05h	F444	
R06h	E860	
R08h	06FF	
R0Ah	4008	
R0Bh	D400	
R0Dh	422C	
R0Eh	2D00	
R0Fh	0000	
R16h	9F80	
R17h	2212	
R1Eh	006D	
R30h	0001	
R31h	0105	
R32h	0000	
R33h	0102	
R34h	0707	
R35h	0206	
R36h	0607	
R37h	0201	
R3Ah	1400	
R3Bh	1400	

8-4. Input Data Signals and Display position on the screen

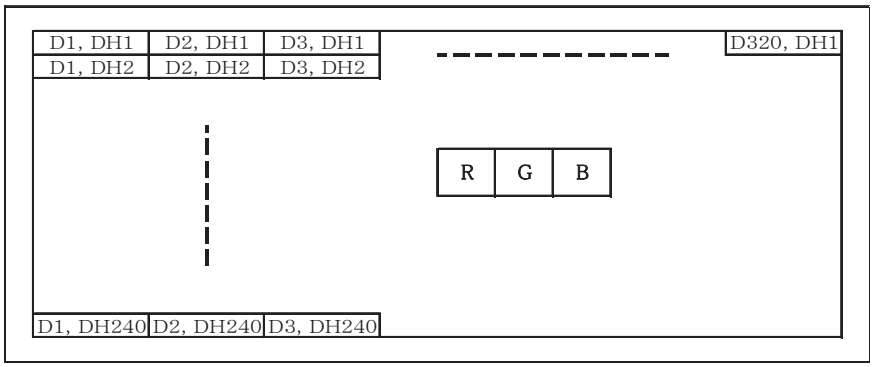

9. Backlight characteristics

Item	Symbol	Min.	Typ.	Max.	Unit	Note
Forward current 1)	IF	-	15	-	mA	Ta=-20～70°C
Forward voltage 1)	VF	-	13.0	13.8	V	IF=15mA, Ta=-20℃
		-	12.5	13.3	V	IF=15mA, Ta=25℃
		-	12.2	13.0	V	IF=15mA, Ta=70℃
Operating life time 2), 3)	T	-	60,000	-	h	IF=15mA, Ta=25℃

1) For each “AN-CA”
2) When brightness decrease 50% of minimum brightness.
   The average life of a LED will decrease when the LCD is operating at higher temperatures.
3) Life time is estimated data.(Condition : IF=15mA, Ta=25℃ in chamber).
4) An input current below 5mA may reduce the brightness uniformity of the LED backlight.
   This is because the amount of light from each LED chip is different. Therefore, please evaluate carefully before finalizing the input current.

10. Design guidance for analog touch panel

10-1. Electrical (In customer's design, please remember the following considerations.)
1) Do not use the current regulated circuit.
2) Keep the current limit with top and bottom layer.
   (Please refer to “Electrical absolute maximum ratings” for details.)
3) Analog touch panel can not sense two points touching separately.
4) A contact resistance is appeared at the touch point between top and bottom layer.
   After this resistance has stable read of the touch panel position data.
5) Because noise of inverter or peripheral circuits may interfere signal of touch panel itself it is necessary to design carefully in advance to avoid these noise problem.

10-2. Software
1) Do the "User Calibration".
2) "User Calibration" may be needed with long term using.
   Include "User Calibration" menu in your software.
3) When drawing a line with a stylus, there may be a slight discontinuity when the stylus passes over a spacer-dot. If necessary, please provide a compensation feature within your software.

10-3. Mounting on display and housing bezel
1) Do not use an adhesive tape to bond it on the front of touch panel and hang it to the housing bezel.
2) Never expand the touch panel top layer (PET-film) like a balloon by internal air pressure.
   The life of the touch panel will be extremely short.
3) If a dew will be on the heat-sealed area or exposed traces at the end of a flexible tail, the migration of silver can occur. This will cause sometimes a short circuit.
4) Must maintain a gap between inside of bezel and touch panel to avoid malfunction or electrode damage of touch panel.

11. Lot number identification

The lot number shall be indicated on the back of the backlight case of each LCD.

TCG035QVLPAAFA-AA00 - □□ - □□ - □ MADE IN □□□□□

↓↓ ↓ ↓ ↓

1 2 3 4 5

No1. - No5. above indicate
1. Year code
2. Month code
3. Date
4. Version Number
5. Country of origin (Japan or China)

Year	2012	2013	2014	2015	2016	2017
Code	2	3	4	5	6	7

Month	Jan.	Feb.	Mar.	Apr.	May	Jun.
Code	1	2	3	4	5	6

Month	Jul.	Aug.	Sep.	Oct.	Nov.	Dec.
Code	7	8	9	X	Y	Z

12. Warranty

12-1. Incoming inspection

Please inspect the LCD within one month after your receipt.

12-2. Production warranty

Kyocera warrants its LCD's for a period of 12 months from the ship date. Kyocera shall, by mutual agreement, replace or re-work defective LCD's that are shown to be Kyocera's responsibility.

13. Precautions for use

13-1. Installation of the LCD

1) The LCD shall be installed so that there is no pressure on the LSI chips.
2) The LCD shall be installed flat, without twisting or bending.

13-2. Static electricity

1) Since CMOS ICs are mounted directly onto the LCD glass, protection from static electricity is required.
2) Workers should use body grounding. Operator should wear ground straps.

13-3. LCD operation

1) The LCD shall be operated within the limits specified. Operation at values outside of these limits may shorten life, and/or harm display images.

13-4. Storage

1) The LCD shall be stored within the temperature and humidity limits specified.
Store in a dark area, and protect the LCD from direct sunlight or fluorescent light.
2) Always store the LCD so that it is free from external pressure onto it.

13-5. Usage

1) DO NOT store in a high humidity environment for extended periods. Polarizer degradation bubbles, and/or peeling off of the polarizer may result.
2) Do not push or rub the touch panel's surface with hard to sharp objects such as knives, or the touch panel may be scratched.
3) When the touch panel is dirty, gently wipe the surface with a soft cloth, sometimes moistened by mild detergent or alcohol. If a hazardous chemical is dropped on the touch panel by mistake, wipe it off right away to prevent human contact.
4) Touch panel edges are sharp. Handle the touch panel with enough care to prevent cuts.
5) Always keep the LCD free from condensation during testing. Condensation may permanently spot or stain the polarizer.
6) Do not disassemble LCD because it will result in damage.
7) This Kyocera LCD has been specifically designed for use in general electronic devices, but not for use in a special environment such as usage in an active gas. Hence, when the LCD is supposed to be used in a special environment, evaluate the LCD thoroughly beforehand and do not expose the LCD to chemicals such as an active gas.
8) Please do not use solid-base image pattern for long hours because a temporary afterimage may appear. We recommend using screen saver etc. in cases where a solid-base image pattern must be used.
9) Liquid crystal may leak when the LCD is broken. Be careful not to let the fluid go into your eyes and mouth. In the case the fluid touches your body; rinse it off right away with water and soap.

14. Reliability test data

Test item	Test condition	Test time	Judgement
High temp. atmosphere	80°C	240h	Display function : No defect Display quality : No defect Current consumption : No defect
Low temp. atmosphere	-30°C	240h	Display function : No defect Display quality : No defect Current consumption : No defect
High temp. humidity atmosphere	40°C 90% RH	240h	Display function : No defect Display quality : No defect Current consumption : No defect
Temp. cycle	-30°C 0.5h R.T. 0.5h 80°C 0.5h	10cycles	Display function : No defect Display quality : No defect Current consumption : No defect
High temp. operation	70°C	500h	Display function : No defect Display quality : No defect Current consumption : No defect
Point Activation life	Silicon rubber, Tip : R = 4.0 Hitting force 3N Hitting speed 2 time/s	one million times	Terminal resistance : No defect Insulation resistance : No defect Linearity : No defect Actuation Force : No defect

1) Each test item uses a test LCD only once. The tested LCD is not used in any other tests.
2) The LCD is tested in circumstances in which there is no condensation.
3) The reliability test is not an out-going inspection.
4) The result of the reliability test is for your reference purpose only.
   The reliability test is conducted only to examine the LCD's capability.

No	Description	Drawn	Checked	Checked	Approved

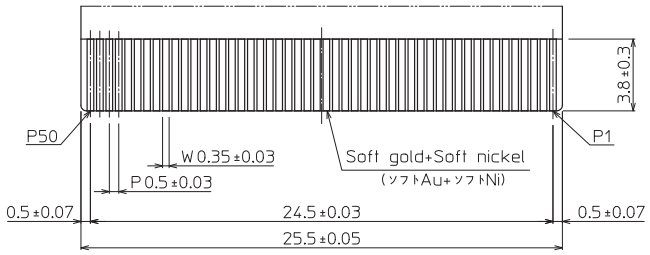

DETAIL C(5:1)

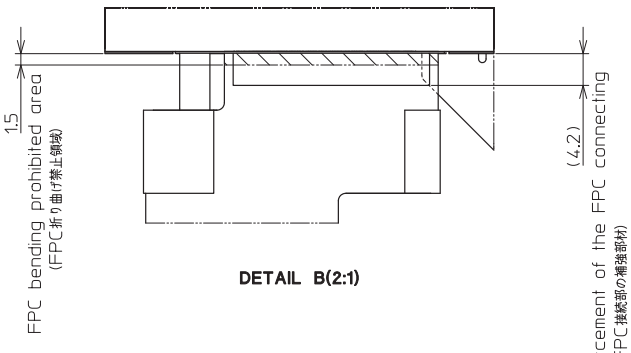

DETAIL B(2:1)

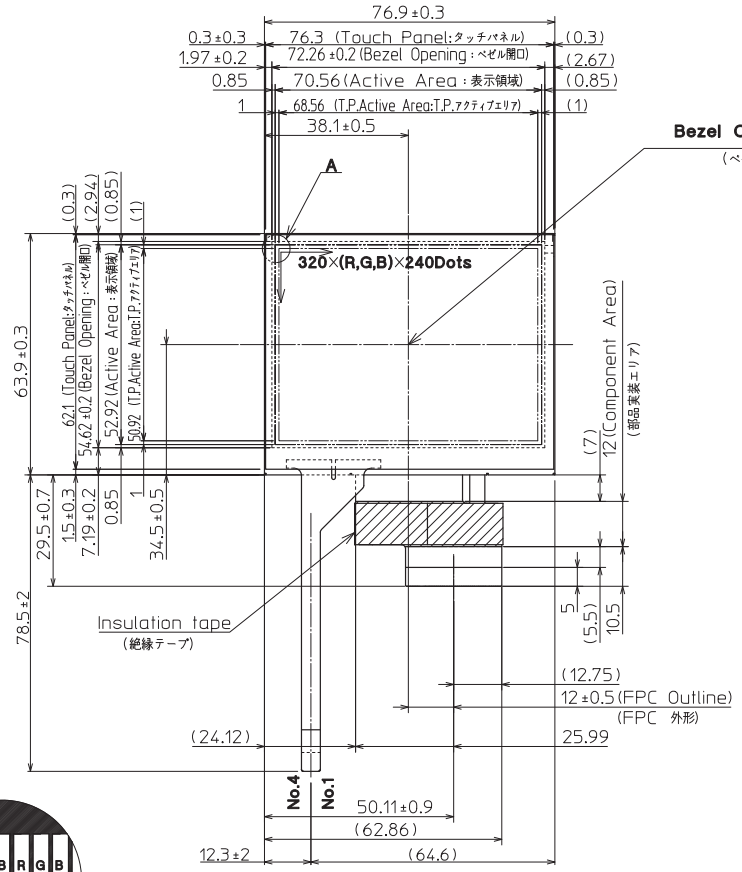

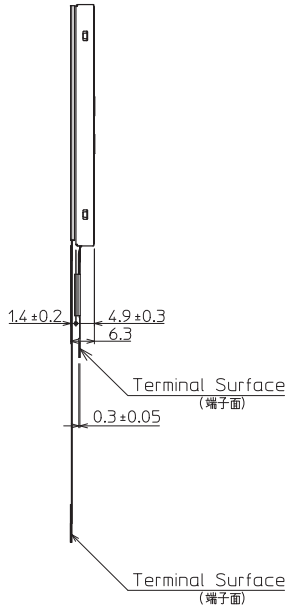

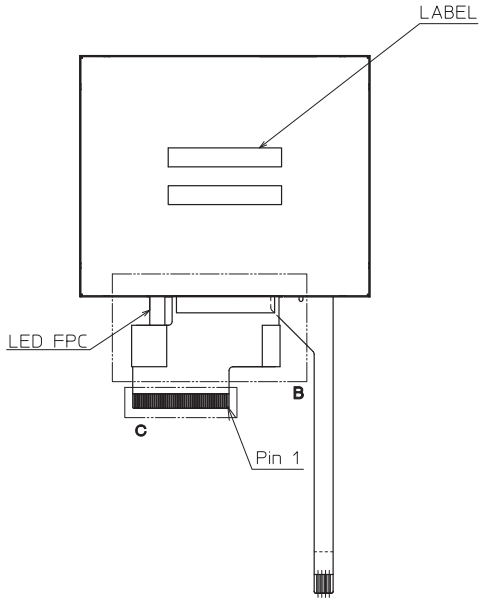

DETAIL A (Dot Size)
(NTS)

Note.(注記)
1.Matching Connector (Reference): 04 6240 050 023 846+ (KYOCERA Connector Products) etc.
(適合コネクター(参考))
2.The Information of LCD is displayed starting at the upper left hand corner moving right then down to the lower right hand corner.
(LCDにおいて、画像データの表示は左上コーナーから始まり、右へ進み下へ送られ右下コーナーへ向かう.)
3.Tolerance without indication:±0.5
(指示無き公差)
4.Touch Panel P/N : P2012600 (121A8050100)

Material 材質	Treatment 処理	Approved '12.06.26	Checked	Checked '12.06.26	Drawn	Scale 1:1(2:1,5:1,NTS)	Title TCG035QVLPAAFA	KYOCERA	Year–Month–Day '12.06.21
Quantity 製作数	Description; 備考 RoHS	朝倉		今村	Rahadian		Outline Dimensions	Drawing No. 121A8060100	Size 2

No	Description	Drawn	Checked	Checked	Approved

Note(注記)

	Name (名称)	Explanation (説明)
1	T.P.	Touch panel (タッチパネル)
2	T.P. Active Area (T.P.アクティブエリア)	Operating area of touch panel (タッチパネルの動作範囲)
3	T.P. Viewing Area (T.P.ビューイングエリア)	Warranty area of touch panel's appearance (タッチパネルの外観(傷・異物等)保証範囲)
		By giving pressure between the active area and the viewing area of the touch panel, there is a possibility that the touch panel will operate. (タッチパネルアクティブエリアとタッチパネルビューイングエリア間は荷重をかけた場合は、タッチパネルが動作する可能性があります。)

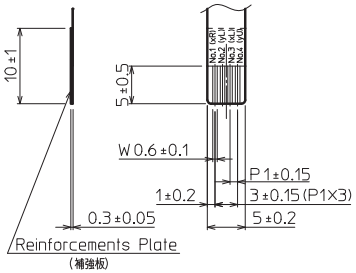

VIEWING A (2:1)

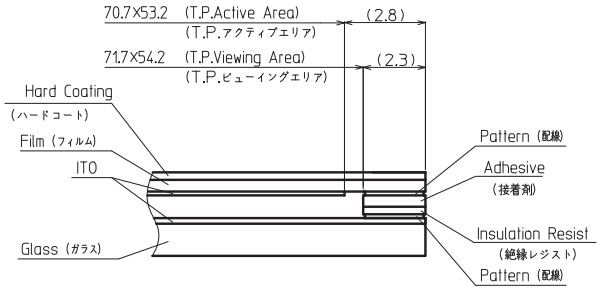

SECTION C–C (NTS)

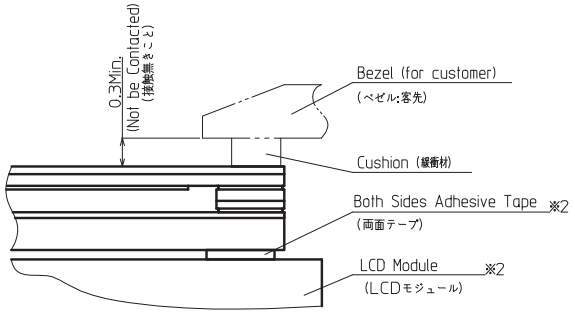

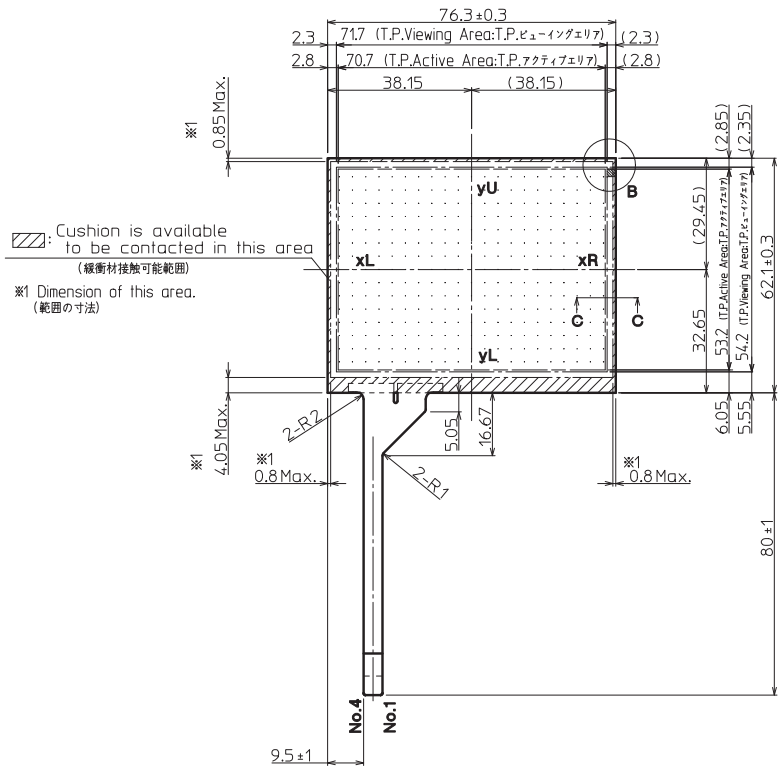

: Cushion is available to be contacted in this area
(緩衝材接触可能範囲)

※1 Dimension of this area.
(範囲の寸法)

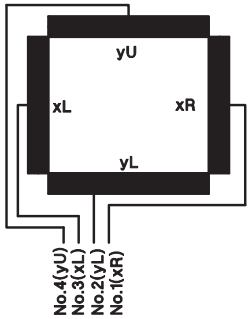

Touch Panel Pin–assign

(Pin-assign from Touch side)
(タッチパネル ピンアサイン、
タッチ面側からのピンアサイン)

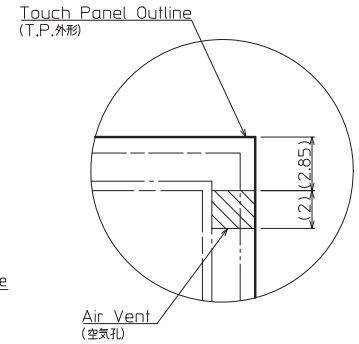

DETAIL B (5:1)

Precaution in use of touch panel.
(タッチパネル使用上の注意事項)
※2 In case of assemble to the LCD
(LCDに取りつける場合)
1. Fix touch panel at LCD module and the rear side of touch panel.
(タッチパネルの固定はLCDモジュール側とタッチパネル裏面とで行なうこと)
2. Must maintain a gap between inside of bezel and touch panel to avoid malfunction or electrode damage of touch panel.
(ベゼル内側とタッチパネルの接触厳禁。誤動作や電極破損の原因となります。)
3. Tolerance without indication: ±0.5
(指示無き公差)

Precaution in use of touch panel.
(タッチパネル使用上の注意事項)
There is vent channel to equalize air pressure between the inner space of the touch panel and the atmosphere.
Please make sure it is not blocked by your housing and mounting method.
(タッチパネルの中には内圧と外圧を均一にするため通気孔を設けています。
取り付け時にこの通気孔を塞がないようにしてください。)

Material 材質	Treatment 処理	Approved '11.10.13	Checked	Checked '11.10.13	Drawn	Scale 1:1 (2:1.5:1,NTS)	Title P2012600	KYOCERA	Year–Month–Day '11.10.09	Size 2
Quantity 製作数	Description; 備考 RoHS	徳森		鶴崎	木口		T.P. Outline Dimensions	Drawing No. 121A8050100		

No	Description	Drawn	Checked	Checked	Approved

○ FPC引き回し方法(参考例)
Wiring methods FPC(Reference Example)

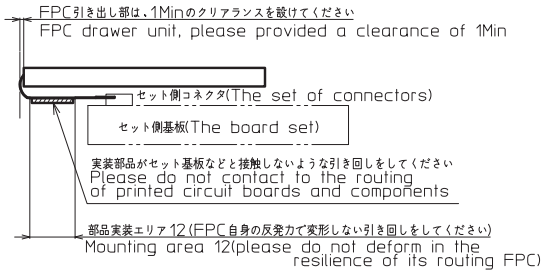

× FPC引き回し方法(NG)
Wiring methods FPC(cases NG)

下図のような、セット側基板などをまたいだ引き回しは、
実装エリアに応力がかかり、部品の損傷が発生する恐れがあります。
As shown below, wiring across the board and set Implementation takes the stress area, may cause damage to components.

× FPC引き回し方法(NG)
Wiring methods FPC(cases NG)

FPCを表示面側に折り曲げての取り付けは、
FPCの断線が発生する恐れがあります。
Installing the folded side to view the FPC is May cause breakage of the FPC.

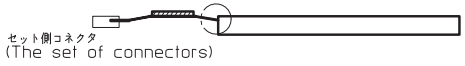

参考(for Reference)

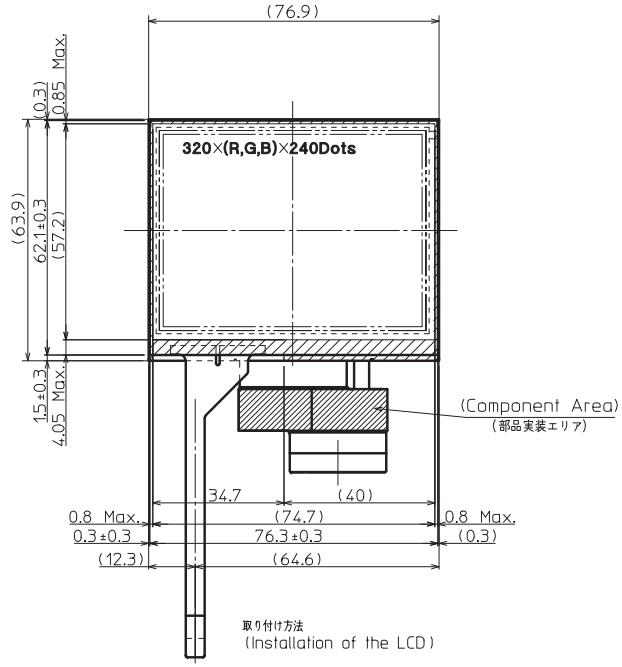

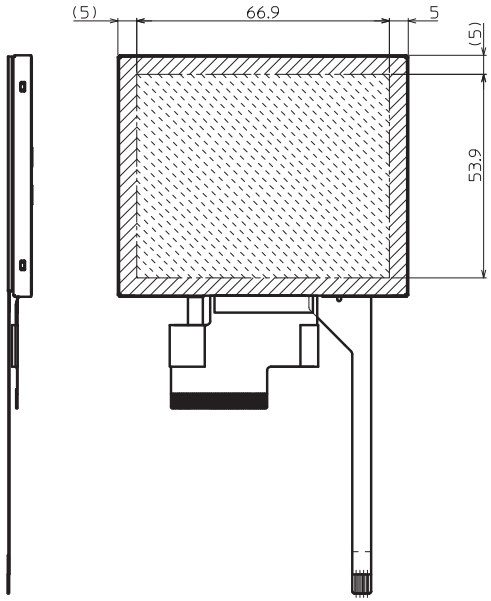

取り付け方法
(Installation of the LCD)

ケースにモジュールをはめ込み(x,y固定)、裏面からz方向を固定する事が可能。
(The LCD module shall be held in the X/Y direction by the housing, and in the Z direction using a backboard.)

斜線部の領域にて、下記の条件を満たし押さえることが望ましい。
(To hold the LCD module in place, it shall be supported with pressure applied to the hatched areas indicated by the descriptions below.)

押さえつけ可能領域
(Pressure may be applied in this area.)

押さえつけ可能領域面積(裏面):1308.0mm2
(Pressure may be applied in this area (Back side):1308.0mm2)
参考全体荷重:4.4kgf (43.6N)
(Referential total load:4.4kgf (43.6N))
参考平均圧力:3.4gf/mm2 (33.7kPa)
(Referential average pressure:3.4gf/mm2 (33.7kPa))
※上記値は参考数値であり、実際の取付構造により十分評価頂きますようお願いします。
(Above figure is reference only. Therefore, please evaluate well by the actual installation structure.)

押さえつけ不可領域
(Pressure failure area.)

表面取り付け条件
(Installation conditions (Front side))

1.広い範囲で均一に押さえることが望ましい
(1. The LCD shall be uniformly supported over as wide an area as possible.)

裏面取り付け条件
(Installation conditions (Back side))

1.FPC部品実装エリアへの接触無きこと
(1. Do not allow any foreign material to contact the FPC Comporment Area.)

2.モジュールがたわむこと無きよう押さえつけのこと
(2. Do not allow the LCD module to bend or twist.)

3.広い範囲で均一に押さえることが望ましい
(3. Support the LCD with uniform pressure over as wide an area as possible.)

Note.(注記)
1.Tolerance without indication:±0.5
(指示無き公差)

※取り付け例 (Installation guidance)

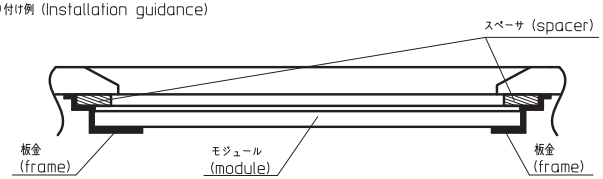

(NTS)

※裏面の押さえつけ可能領域以外(押さえつけ禁止エリアを除く)を押さえると、取付構造によっては、
表示ムラが発生する場合が有ります。
しかしながら、GND接続等で押さえる必要が有る場合は、25mm2 (5mmX5mm)に対して、
0.33kgf (3.2N)を目安として下さい。
なお、上記値は、参考数値であり、実際の取付構造により十分評価頂きますようお願いします。

(※ If area other than pressure available area on the rear side is pressured, there is a case that display variation is caused. However, when pressure is needed for GND connection or so, 0.33kgf (3.2N) per 25mm2 (5mmX5mm) will be a referential figure. Above figure is reference only. Therefore, please evaluate well under the actual installation structure.)

Material 材質	Treatment 処理	Approved	Checked	Checked	Drawn	Scale	Title		Year-Month-Day	Size
		'12.07.03		'12.07.03		1:1(NTS)	TCG035QVLPAAFA	KYOCERA	'12.07.02	2
Quantity 製作数	Description; 備考 RoHS	朝倉		今村	Rahadian		Module Installation	Drawing No.	121A8060500	

Spec No.	TQ3C-8EAF0-E2YAD20-01
Date	December 17, 2013

KYOCERA INSPECTION STANDARD

TYPE : TCG035QVLPAAFA-AA00

KYOCERA DISPLAY CORPORATION

Original Issue Date	Designed by : Engineering dept.			Confirmed by : QA dept.	
	Prepared	Checked	Approved	Checked	Approved
July 12, 2012	K. Mori	Y. Yamazaki	M. Fujitani	O. Sato	I. Hamada

KYOCERA

Revision record

Date	Designed by : Engineering dept.			Confirmed by : QA dept.	
	Prepared	Checked	Approved	Checked	Approved
December 17, 2013	K. Mori	Y. Yamazaki	M. Fujitani	O. Sato	I. Hamano

Rev.No.	Date	Page	Descriptions
01	Dec 17, 2013	-	Change name of company =KYOCERA CORPORATION LCD DIVISION →KYOCERA DISPLAY CORPORATION

Visuals specification

1) Note

	Note		
General	1. Customer identified anomalies not defined within this inspection standard shall be reviewed by Kyocera, and an additional standard shall be determined by mutual consent. 2. This inspection standard about the image quality shall be applied to any defect within the effective viewing area and shall not be applicable to outside of the area. 3. Inspection conditions Luminance : 500 Lux min. Inspection distance : 300 mm. Temperature : 25 ± 5℃ Direction : Directly above		
Definition of inspection item	Dot defect	Bright dot defect	The dot is constantly “on” when power applied to the LCD, even when all “Black” data sent to the screen. Inspection tool: 5% Transparency neutral density filter. Count dot: If the dot is visible through the filter. Don’t count dot: If the dot is not visible through the filter. 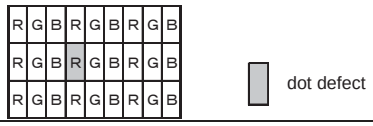
		Black dot defect	The dot is constantly “off” when power applied to the LCD, even when all “White” data sent to the screen.
		Adjacent dot	Adjacent dot defect is defined as two or more bright dot defects or black dot defects. 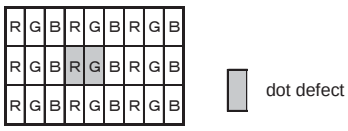
	External inspection	Bubble, Scratch, Foreign particle (Polarizer, Cell, Backlight)	Visible operating (all pixels “Black” or “White”) and non operating.
		Appearance inspection	Does not satisfy the value at the spec.
	Definition of size	Definition of circle size 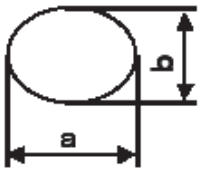 d = (a + b)/2	Definition of linear size 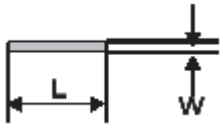

2) Standard

<table>
<tr><th colspan="2">Classification</th><th colspan="2">Inspection item</th><th>Judgement standard</th></tr>
<tr><td rowspan="6">Defect (in LCD glass)</td><td rowspan="5">Dot defect</td><td colspan="2">Bright dot defect</td><td>Acceptable number : 4
Bright dot spacing : 5 mm or more</td></tr>
<tr><td colspan="2">Black dot defect</td><td>Acceptable number : 5
Black dot spacing : 5 mm or more</td></tr>
<tr><td rowspan="2">2 dot join</td><td>Bright dot defect</td><td>Acceptable number : 2</td></tr>
<tr><td>Black dot defect</td><td>Acceptable number : 3</td></tr>
<tr><td colspan="2">3 or more dots join</td><td>Acceptable number : 0</td></tr>
<tr><td colspan="2">Total dot defects</td><td>Acceptable number : 5 Max</td></tr>
<tr><td>Others</td><td colspan="2">White dot, Dark dot (Circle)</td><td>
<table>
<tr><th>Size (mm)</th><th>Acceptable number</th></tr>
<tr><td>d ≦ 0.2</td><td>(Neglected)</td></tr>
<tr><td>0.2 ＜ d ≦ 0.4</td><td>5</td></tr>
<tr><td>0.4 ＜ d ≦ 0.5</td><td>3</td></tr>
<tr><td>0.5 ＜ d</td><td>0</td></tr>
</table>
</td></tr>
<tr><td rowspan="4">External inspection (Defect on Polarizer or between Polarizer and LCD glass)</td><td colspan="2">Polarizer (Scratch)</td><td>
<table>
<tr><th>Width (mm)</th><th>Length (mm)</th><th>Acceptable number</th></tr>
<tr><td>W ≦ 0.1</td><td>－</td><td>(Neglected)</td></tr>
<tr><td rowspan="2">0.1 ＜ W ≦ 0.3</td><td>L ≦ 5.0</td><td>(Neglected)</td></tr>
<tr><td>5.0 ＜ L</td><td>0</td></tr>
<tr><td>0.3 ＜ W</td><td>－</td><td>0</td></tr>
</table>
</td></tr>
<tr><td colspan="2">Polarizer (Bubble)</td><td>
<table>
<tr><th>Size (mm)</th><th>Acceptable number</th></tr>
<tr><td>d ≦ 0.2</td><td>(Neglected)</td></tr>
<tr><td>0.2 ＜ d ≦ 0.3</td><td>5</td></tr>
<tr><td>0.3 ＜ d ≦ 0.5</td><td>3</td></tr>
<tr><td>0.5 ＜ d</td><td>0</td></tr>
</table>
</td></tr>
<tr><td colspan="2">Foreign particle (Circular shape)</td><td>
<table>
<tr><th>Size (mm)</th><th>Acceptable number</th></tr>
<tr><td>d ≦ 0.2</td><td>(Neglected)</td></tr>
<tr><td>0.2 ＜ d ≦ 0.4</td><td>5</td></tr>
<tr><td>0.4 ＜ d ≦ 0.5</td><td>3</td></tr>
<tr><td>0.5 ＜ d</td><td>0</td></tr>
</table>
</td></tr>
<tr><td colspan="2">Foreign particle (Linear shape)
Scratch</td><td>
<table>
<tr><th>Width (mm)</th><th>Length (mm)</th><th>Acceptable number</th></tr>
<tr><td>W ≦ 0.03</td><td>－</td><td>(Neglected)</td></tr>
<tr><td rowspan="3">0.03 ＜ W ≦ 0.1</td><td>L ≦ 2.0</td><td>(Neglected)</td></tr>
<tr><td>2.0 ＜ L ≦ 4.0</td><td>3</td></tr>
<tr><td>4.0 ＜ L</td><td>0</td></tr>
<tr><td>0.1 ＜ W</td><td>－</td><td>(According to circular shape)</td></tr>
</table>
</td></tr>
</table>

<table>
<tr><th>Inspection item</th><th>Judgement standard</th></tr>
<tr><td>Scratch,
Foreign particle
(Touch screen portion)</td><td>(W = Width, L = Length, D = Diameter = (major axis＋minor axis)/ 2)
<table>
<tr><th>Item</th><th>Width(mm)</th><th>Length(mm)</th><th>Acceptable number</th></tr>
<tr><td rowspan="4">Scratch</td><td>d ≦ 0.03</td><td>L ≦ 20</td><td>Neglected</td></tr>
<tr><td>0.03 ＜ d ≦ 0.05</td><td>L ≦ 10</td><td>2pcs within φ20mm</td></tr>
<tr><td>0.05 ＜ d ≦ 0.08</td><td>L ≦ 6</td><td>2pcs within φ20mm</td></tr>
<tr><td>0.08 ＜ d ≦ 0.1</td><td>L ≦ 4</td><td>1pcs within φ30mm</td></tr>
<tr><td rowspan="2">Foreign
(line like)</td><td>W ≦ 0.05</td><td>Neglected</td><td>Neglected</td></tr>
<tr><td>0.05 ＜ W ≦ 0.1</td><td>L ≦ 5</td><td>2pcs within ϕ30mm</td></tr>
<tr><td rowspan="2">Foreign
(circle like)</td><td colspan="2">D ≦ 0.2</td><td>Neglected</td></tr>
<tr><td colspan="2">0.2 ＜ D ≦ 0.3</td><td>2pcs within ϕ30mm</td></tr>
</table>
Above are applied to the visible area.
Unless there are foreign particle and damage affected seriously to the electrical performance out of the active area, we approve of this product.</td></tr>
<tr><td>Glass crack
(Touch screen portion)</td><td>
<table>
<tr><th>Item</th><th colspan="3">Size (mm)</th><th>Acceptable number</th></tr>
<tr><td>Corner crack</td><td rowspan="3"> 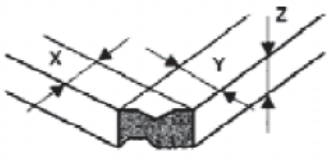
</td><td>X</td><td>≦3</td><td rowspan="3">2 pcs
/panel</td></tr>
<tr><td>Y</td><td>≦3</td></tr>
<tr><td>Z</td><td>＜t</td></tr>
<tr><td>Crack in other area than in corner</td><td rowspan="3"> 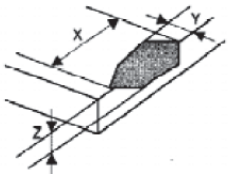
</td><td>X</td><td>≦5</td><td rowspan="3">2 pcs
/side</td></tr>
<tr><td>Y</td><td>≦1.5</td></tr>
<tr><td>Z</td><td>＜t</td></tr>
<tr><td>Progressive crack</td><td> </td><td colspan="3">0 pcs
(NG even 1pcs)</td></tr>
</table>
</td></tr>
</table>

Mouser Electronics

Authorized Distributor

Click to View Pricing, Inventory, Delivery & Lifecycle Information:

Kyocera:
TCG035QVLPAAFA-AA00