THIS DRAWING IS UNPUBLISHED.
VERTRAULICHE UNVEROEFFENTLICHTE ZEICHNUNG
© COPYRIGHT 1997 BY AMP INCORPORATED
RELEASED FOR PUBLICATION – .1997.
FREI FUER VEROEFFENTLICHUNG
ALL RIGHTS RESERVED.
ALLE RECHTE VORBEHALTEN

MASTED WITH:
PASSEND ZU:
Bg8

REVISIONS
AENDERUNGEN

P	LTR	DESCRIPTION BESCHREIBUNG	DATE	DWN	APVD
	B25	ECR-18-005691	08MAY2018	GCM	MKO

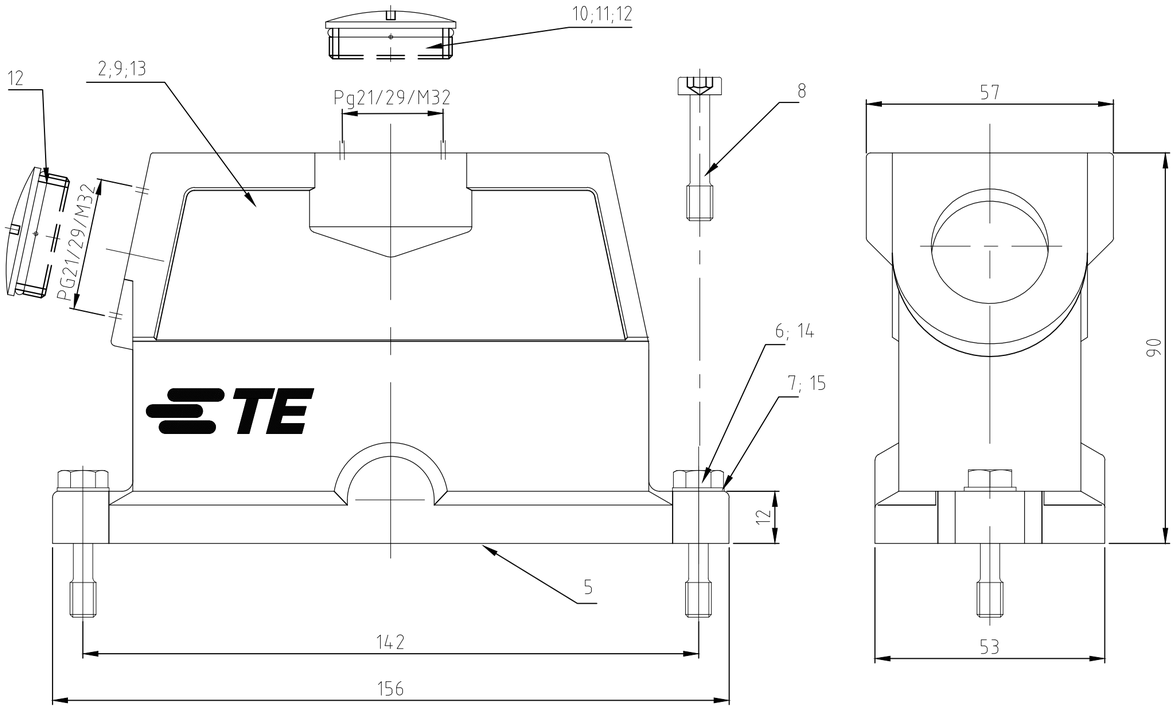

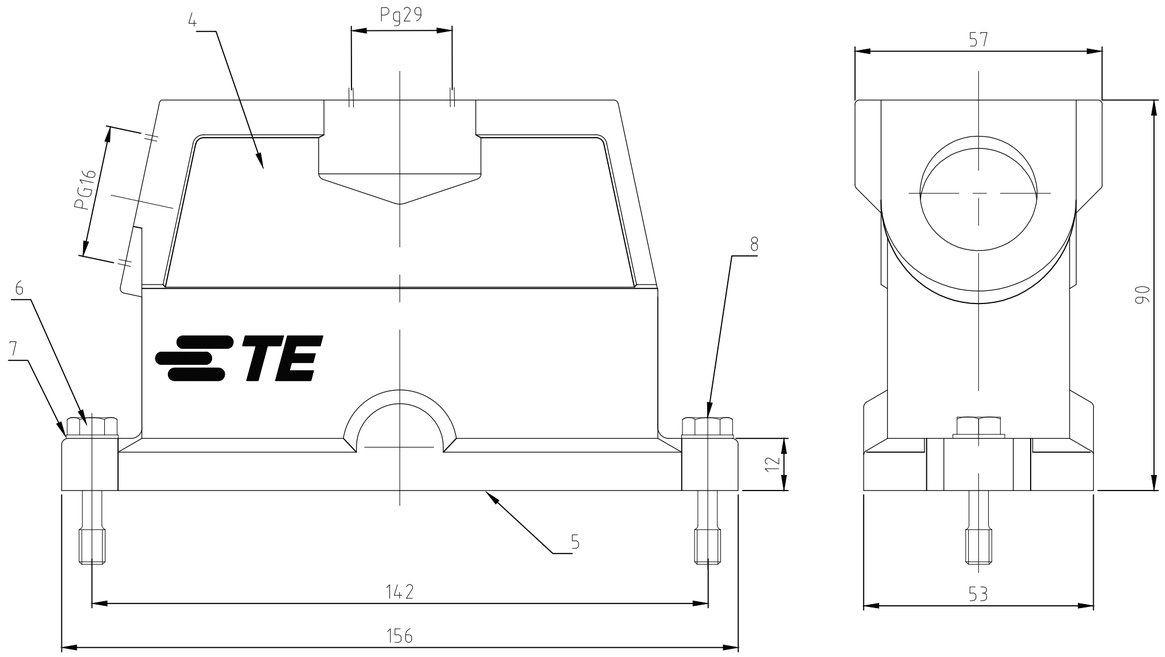

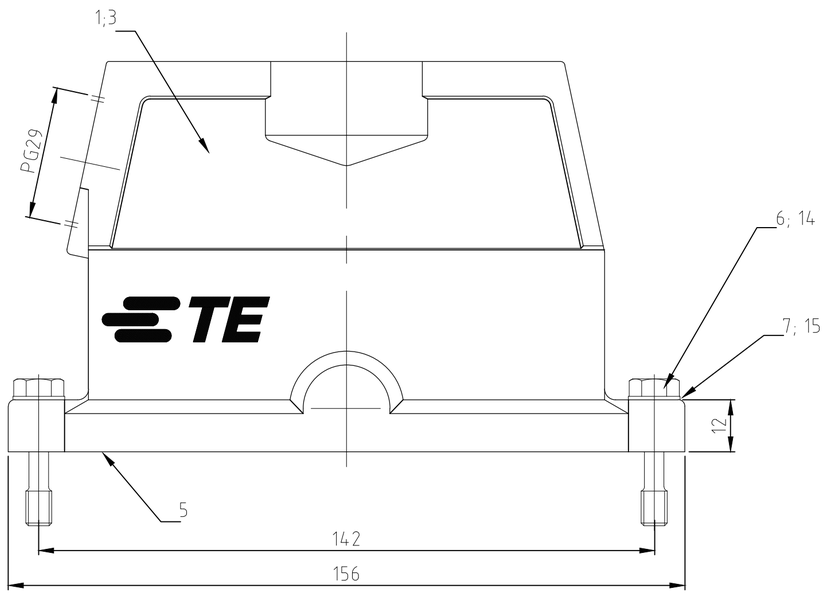

		OBSOLETE	OBSOLETE			OBSOLETE	OBSOLETE	OBSOLETE	OBSOLETE	OBSOLETE		OBSOLETE				OBSOLETE		OBSOLETE	OBSOLETE						
2	2			2	2	2	2	2	2	2											Scheibe/Pane	V4A/stainl. steel	blank/blank		15	
2	2			2	2	2	2	2	2	2											Allen screw	V4A/stainl. steel	blank/blank		14	M6x30
1	1	1	1	1	1						1	1									Steckergehäuse EMV/hood	Aluminium/Alu		unvarnished	13	spot face 1.5mm
										1		2	1								Blindstopfen Pg29/blanking piece	Plastic	natur		12	(PN 0-4 und 0-7 als STS) / (PN 0-5 als STO+STS)
										1			1	1							O-Ring Pg29	Neoprene		black/schwarz	11	
										1			1	1							Blindstopfen Pg29/blanking piece	MS/brass	vernickelt/nickel plated	blau/blue	10	for STO
													1	1						1	Plug housing EMV/hood	Aluminium/Alu		white aluminum	9	STO.1.29+STS.1.29
													2								Allen screw	V2A/stainl. steel	blank/blank		8	
		2	2								2	2	2	2	2	2	2	2	2		Scheibe/Pane	V2A/stainl. steel	blank/blank		7	
		2	2								2	2		2	2	2	2	2	2		Allen screw	V2A/stainl. steel	blank/blank		6	M6x30
1	1	1	1	1	1	1	1	1	1	1	1	1	1	1	1	1	1	1	1		Dichtung/seal	Neoprene		black/schwarz	5	conductive
																1					Plug housing EMV/hood	Aluminium/Alu		grey/grau	4	
									1	1	1							1			Plug housing EMV/hood	Aluminium/Alu	SEE NOTE 2	black/schwarz	3	
							1	1													Plug housing EMV/hood	Aluminium/Alu		grey/grau	2	
																			1		Plug housing EMV/hood	Aluminium/Alu		grey/grau	1	
1-8	1-7	1-5	1-4	1-3	1-2	1-1	1-0	0-9	0-8	0-7	0-6	0-5	0-4	0-3	0-2	4-5	3-5	0-1			DESCRIPTION / BENENNUNG	MATERIAL	SURFACE/OBERFLÄCHE	COLOR/FARBE	ITEM NO.	REMARKS / BEMERKUNGEN
EMV.24/64.STO.1.M40.G	EMV.24/64.STS.1.M40.G	EMV.24/64.STO.1.M32.G	EMV.24/64.STS.1.M32.G	EMV.24/64.STO.1.M32.G	EMV.24/64.STS.1.M32.G	EMV.24/64.STO.1.21.G+STS.1.21.G	EMV.24/64.STO.1.29.G+STS.1.29.G	EMV-K.24/64.STO.1.29.G	EMV-K.24/64.STS.1.29.G	EMV-K.24/64.STO.1.29.G+STS.1.29.G	EMV.24/64.STO.1.29.G+STS.1.29.G	EMV.24/64.STO.1.29.G+STS.1.29.G	EMV.24/64.STO.1.29.G+STS.1.29.G	EMV.24/64.STO.1.29.G+STS.1.29.G	EMV.24/64.STO.1.29.G+STS.1.46.G	EMV-K.24/64.STS.1.29.G	EMV.24/64.STS.1.29.G	EMV.24/64.STO.1.29.G+STO.1.29.G	ORDERING TEXT/BESTELLTEXT						

Notes:

1. Surface: Varnish grey
   Varnish black
   chromitAL TCP passivation
2. Varnish on the inside not necessarily
3. Packaging guantity 5 pieces

Bemerkungen:

1. Surface: Lackierung grau
   Lackierung grau
   chromitAL TCP passivation
2. Lackierung im Gehäuseinnere ist nicht notwendig
3. Verpackungsmenge 5 Stück

THIS DRAWING IS A CONTROLLED DOCUMENT.
DIESE ZEICHNUNG IST EIN KONTROLLIERTES DOKUMENT.

DIMENSIONS: MASSE\NHEITEN: mm

TOLERANCES UNLESS OTHERWISE SPECIFIED: ALLGEMEINTOLERANZEN
n. ISO 8015
n. ISO 2768 - mH - E
n. DIN 16901 - tG9

0 PLC ± –
1 PLC ± –
2 PLC ± –
3 PLC ± –
4 PLC ± –
ANGLES / WINKEL ± –

MATERIAL –
FINISH / OBERFLAECHE / FARBE –

DWN 19.02.1999 Schneider
CHK 19.02.1999 Schneider
APVD –
PRODUCT SPEC PRODUKTSPEZ. —
APPLICATION SPEC. VERABEITUNGSSPEZ. —
WEIGHT GEWICHT

TE Connectivity

NAME
Hood EMV size8
Plug housing EMV Bg8
–

SIZE A2 | CAGE CODE 00779 | DRAWING NO ZEICHNUNGS-NR. C-1102755 | RESTRICTED TO NUR FUER —

CUSTOMER DRAWING / KUNDENZEICHNUNG | SCALE MASSSTAB 1:1 | SHEET BLATT 1 von 1 | REV B25

1102755