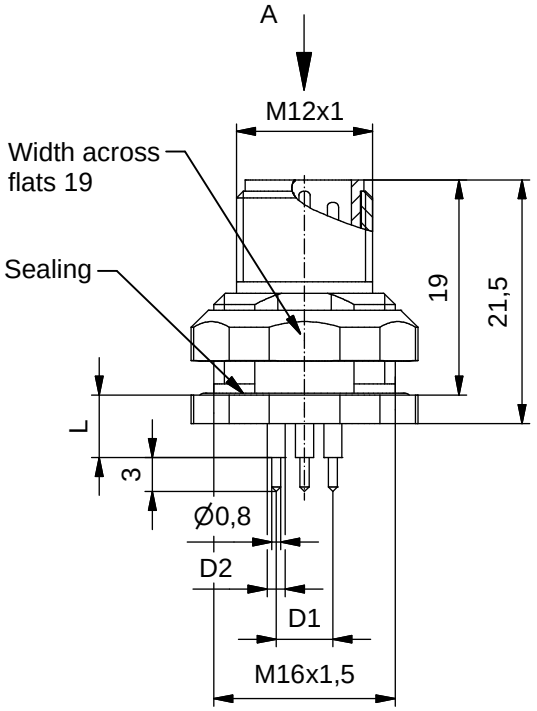

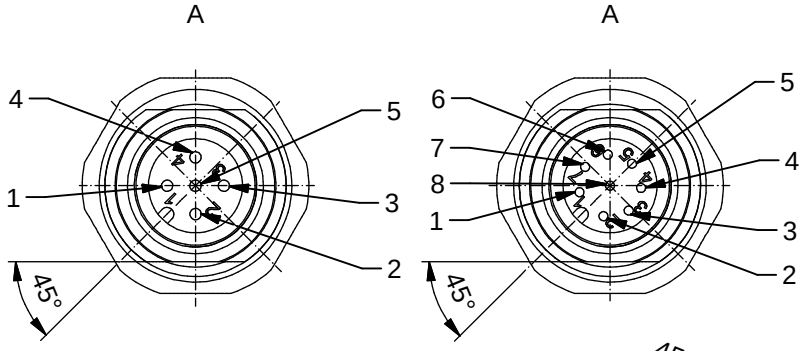

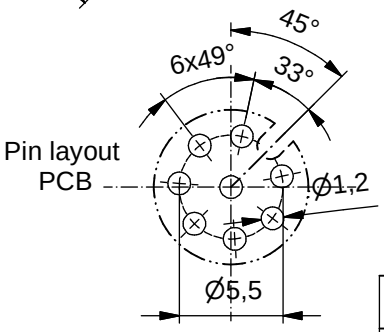

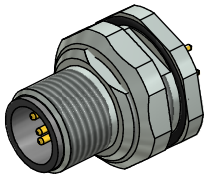

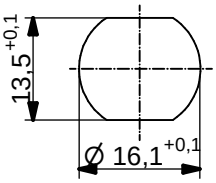

Minimum wall thickness 1,5mm, alternativ panel cut-out d=16,1

Technical specification:

Rated voltage: IEC 61076-2-101	4pos 250 V	5pos 60 V	8pos 30 V
Current rating: IEC 61076-2-101	4/5pos 4 A at 40℃	8pos 2 A at 40℃	
Insulation resistance: IEC 60512	>=100 MΩ		
Pollution degree: IEC 60664-1	3/2		
Degree of protection: IEC 60529	IP 67, in mated condition		
Temperature range:	-30℃ ... +85℃		
Mating cycles: IEC 60512-9a	>=100		

Materials:

Contact:	CuZn
Contact plating:	Nickel, gold plated
Contact carrier:	PBT GF, UL 94
Sealing chassis:	NBR
Counternut:	CuZn, nickel plated
Socket housing:	CuZn, nickel plated
Grouting:	Polyurethane-resin, UL 94

Installation specification:

Recommended torque:	1-1,2 Nm
Conec installation tool:	Torque wrench: 36-000200 Insert across flats 19: 36-000250

Part no:	Description:	Pos	Length L:	D1	D2
43-01032	SAL - 12 - FSH4 - P5,5	4	5,5mm	Ø5,0	Ø1,6
43-01033	SAL - 12 - FSH5 - P5,5	5			
43-01034	SAL - 12 - FSH8 - P5,5	8		Ø5,5	Ø1,4
43-01035	SAL - 12 - FSH4 - P12	4	12mm	Ø5,0	Ø1,6
43-01036	SAL - 12 - FSH5 - P12	5			
43-01037	SAL - 12 - FSH8 - P12	8		Ø5,5	Ø1,4

DO NOT ALTER CAD DRAWING BY HAND

Directive 2011/65/EU RoHS compliant

Index: d 02.09.14 MG Ä5180
temperature range changed

dim. in mm

	date	name
drawn	01.03.07	Fromm
appd.	01.03.07	Mankopf

general tolerance: 0 ± 0,50mm; 0,0 ± 0,25mm; 0,00 ± 0,10mm

title: Male socket M12x1 with dip solder, backmounting

dwg no: 43K1A268

part no: see table

THIS DRAWING MAY NOT BE COPIED OR REPRODUCED IN ANY WAY, AND MAY NOT BE PASSED ON TO A THIRD PARTY WITHOUT WRITTEN PERMISSION. OWNERSHIP AND COPYRIGHT OF CONEC GmbH