REV.	MATTER	APP.	DATE
A			

Kinghelm®

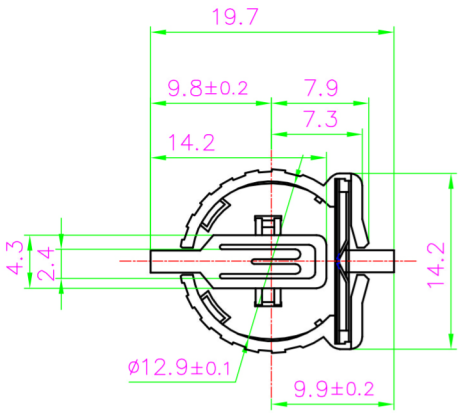

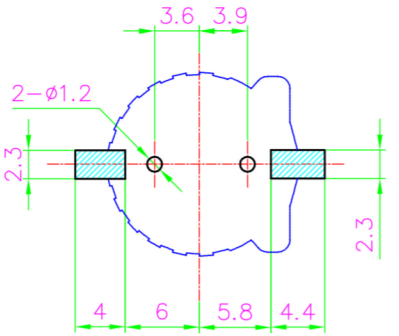

PCB Holes Diagram
Top View

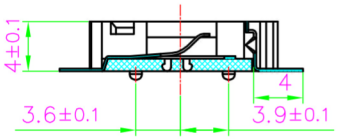

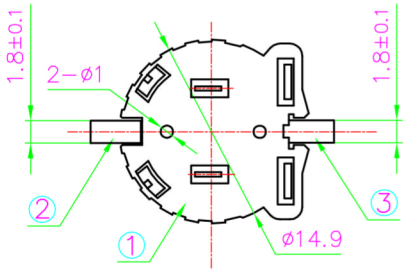

Main specification:

1. Contact resistance: 30mΩ min.
2. Insulation resistance: 1000MΩ max.
3. Withstand voltage: 500V AC for 1 minute.

ORDERING INFORMATION

BS-12-A**0*002

- 电池座系列
- BS-12系列
- SMT 180° TYPE
- MATERIAL:
  1A–PBT WHITE
  1B–PBT BLACK
  2A–PPS WHITE
  2B–PPS BLACK
  3A–PPA WHITE
  3B–PPA BROWN
- CRUST:
  0–WITHOUT
- PLATING:
  J–Au1U"
  K–Au30U"

注: ▼为重点管控尺寸

TOLERANCE	Tolerance: Unless otherwise specified		
LINEAR: x. ±1; .x ±0.38; .xx ±0.25; .xxx ±0.10 — ANGLE: x.° ±5°; .x° ±2°; .xx° ±1°	3	TERMINAL–2	QSn6.5–0.2	Au–Plated
	2	TERMINAL–1	QSn6.5–0.2	Au–Plated
	1	HOUSING	PPA	BROWN
	NO.	PART NAME	MATERIAL	COLOR/FINISHED

深圳市金航标电子有限公司	www.kinghelm.com.cn	日期DATE	单位UNITS	审核CHECK	BATTERY HDLDER	PART NO. BS-12-A3B0J002
		2009.1.28	mm			
KH-BS1220-2	0755-28190160	比例SCALE	制图 DRAW	设计DESIGN	TITLE: 两PIN电池座卧式SMT（BS-1220-2）	
		1/1				