REVISIONS					
REV.	ECN NO.	LOCATION	DESCRIPTION	DATE	DESIGN
A0	N/A		INITIAL RELEASE	/	/
A1	N/A		产品图纸修正，图面升级整理图面	2025.05.14	阿树

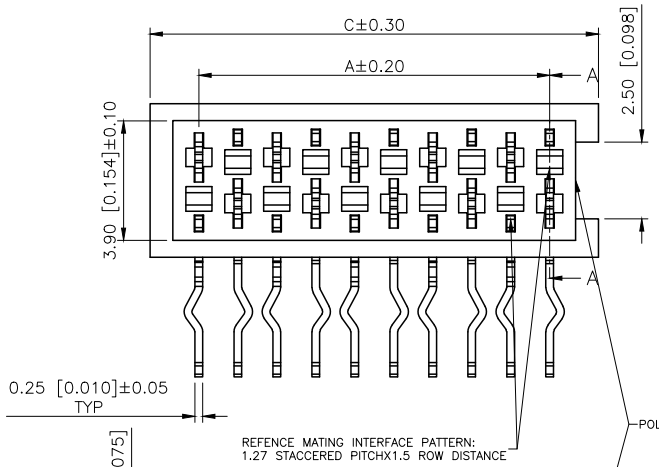

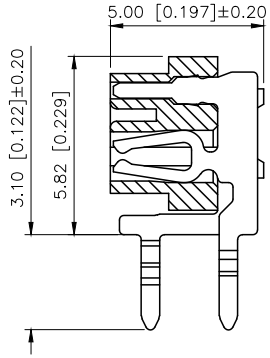

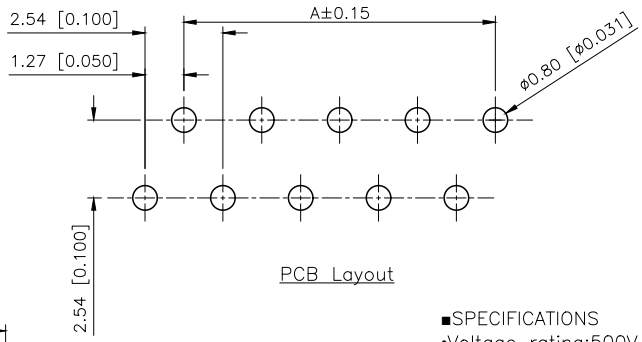

PCB Layout

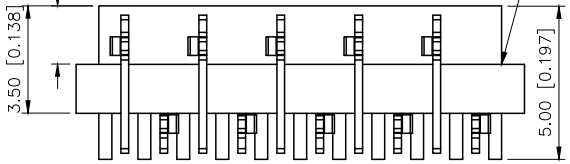

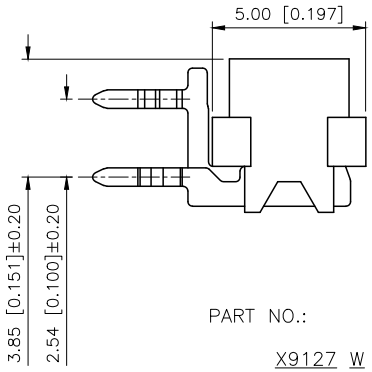

■SPECIFICATIONS
- •Voltage rating:500V AC/DC
- •Current rating:1A AC/DC
- •Withstanding Voltage:1000V AC/minute
- •Temperature range:−40°C~+125°C
- •Insulation resistance:≥1000MΩ
- •Contact resistance: ≤20mΩ
- •After environmental testing:≤30mΩ

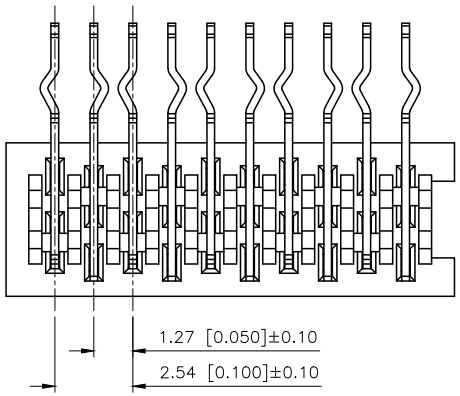

PART NO.:

X9127 W R−XX A1−9T SN XX
① ② ③ ④ ⑤ ⑥ ⑦ ⑧

①Series No
②Category:W−Wafer
③Welding Board Angle:R−Stright 90°
④Row No.Pin No:XX−04~26Pin
⑤Special No:A1−Without Ear and boss, with tail and Single Concave
⑥Material: 9T−PA9T UL 94V−0
⑦Plating Category: SN−Bright tin Plating
⑧Color: RE−Red ; RD−Purplish red

Poles	Dimensions(mm)			Poles	Dimensions(mm)		
	A	B	C		A	B	C
4	3.81	5.50	6.99	16	19.05	20.74	22.23
6	6.35	8.04	9.53	18	21.59	23.28	24.77
8	8.89	10.58	12.07	20	24.13	25.82	27.31
10	11.43	13.12	14.61	22	26.67	28.36	29.85
12	13.97	15.66	17.15	24	29.21	30.90	32.39
14	16.51	18.20	19.69	26	31.75	33.44	34.93

PART NO	Material	Material(Pin)	Suitable XKB Terminal
X9127WR−XXA1−9TSNRE	PA9T	Bronze	X9635TF

AuGLAR	±5°
X.	±0.40
X.x	±0.30
X.xx	±0.20
X.xxx	±0.15
UNSPECIFIED TOLERAuCES	

XKB Connection 星创

DESIGN	阿树	VIEW:	MODEL TYPE: 1.27mm Crimp Style Connectors
CHECKED		UNIT: mm/in	PART NO.: X9127WR−XXA1−9TSNRE
APPROVED		SIZE: A4	DWG NO.:

XKB INDUSTRIAL PRECISION CO.,LIMITED

SCALE	PAGE	REVISION
N/A	1/1	A1