Product NO.	DOSIN-801-0052			
REV	DESCRIPTION	DWN	DATE	APPROVEN
A	First issue	Mr. CHEN	2016/2/04	John kine
B				

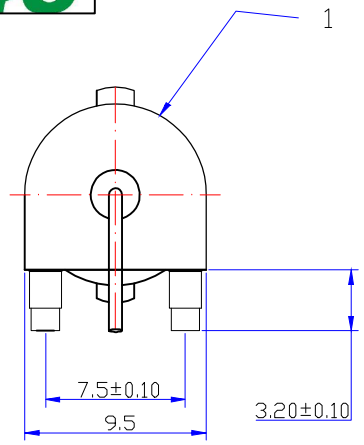

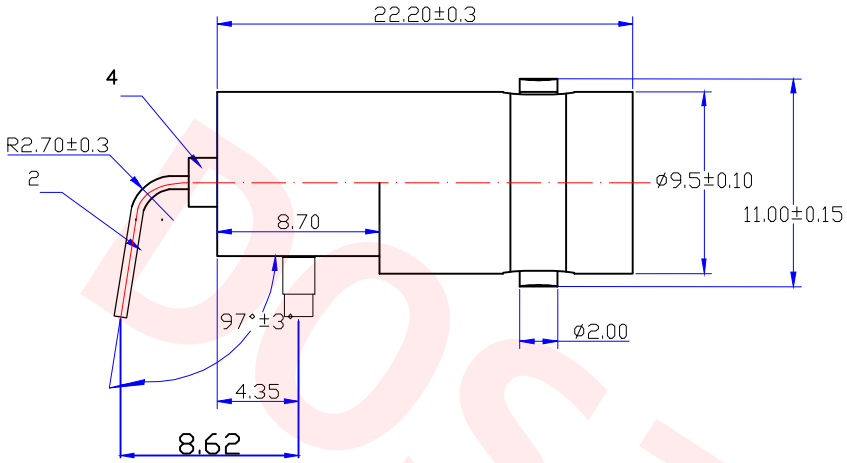

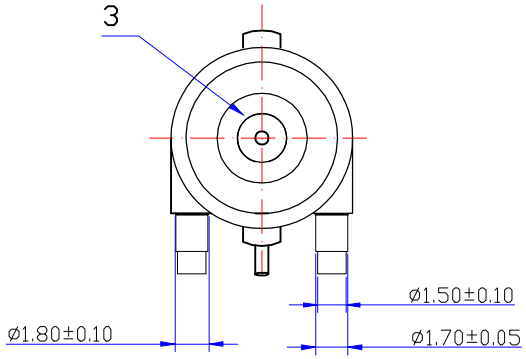

Specifications

Impedance:50 Ohms
Frequency Range:DC~3G
VSWR:1.3MAX
Working Voltage:500V rms @ sea level
Insulation Resistance:5000 Ohms min
Temperature Range:-55℃ TO +155℃
Relative Temperature:≤95%(40° C±2° C)
Drawings products are in line with ROHS standards

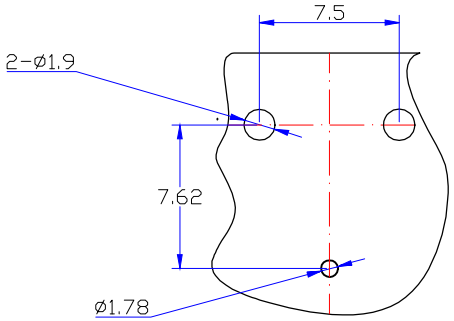

NO	Component Number	Material	Finish
1	Body	BARSS	NICKEL
2	Insulator	POM	White
3	Center contact	BARSS	GOLD
4			
5			
6			
7			
8			
9			
10			

NOTE:

DRAWN	Zelin. Zhang
CHECKED	
APPROVALS	

Tolerance	X. ±0.25 X.X ±0.15 X.XX ±0.10 Angular ±5°
View	
UNIT	MM
SCALE	1:1

DOSIN RF CONNECTOR Dosin Industrial (H.K) Co. Ltd
东莞市德索五金电子制品有限公司
Dosin Hardware Electronics Co., Ltd
E-mail:dosin2005@163.com
dosin2005@dosin-china.com
Web:http://www.dosinconn.com
TEL:(0086)769-81153906
FAX:(0086)769-81875836

Name: BNC JACK CONNECTOR DNN

SIZE	Product NO.	REV
A	DOSIN-801-0052	A

DateTime	CAD FILE	SHEET: 1 OF 1
2016/2/04	H/company drawings/BD	

DOSIN