REVISIONS					
REV.	ECN NO.	LOCATION	DESCRIPTION	DATE	DESIGN
A0	N/A		INITIAL RELEASE	/	/
A1	N/A		图面升级整理图面	2024.12.16	阿树

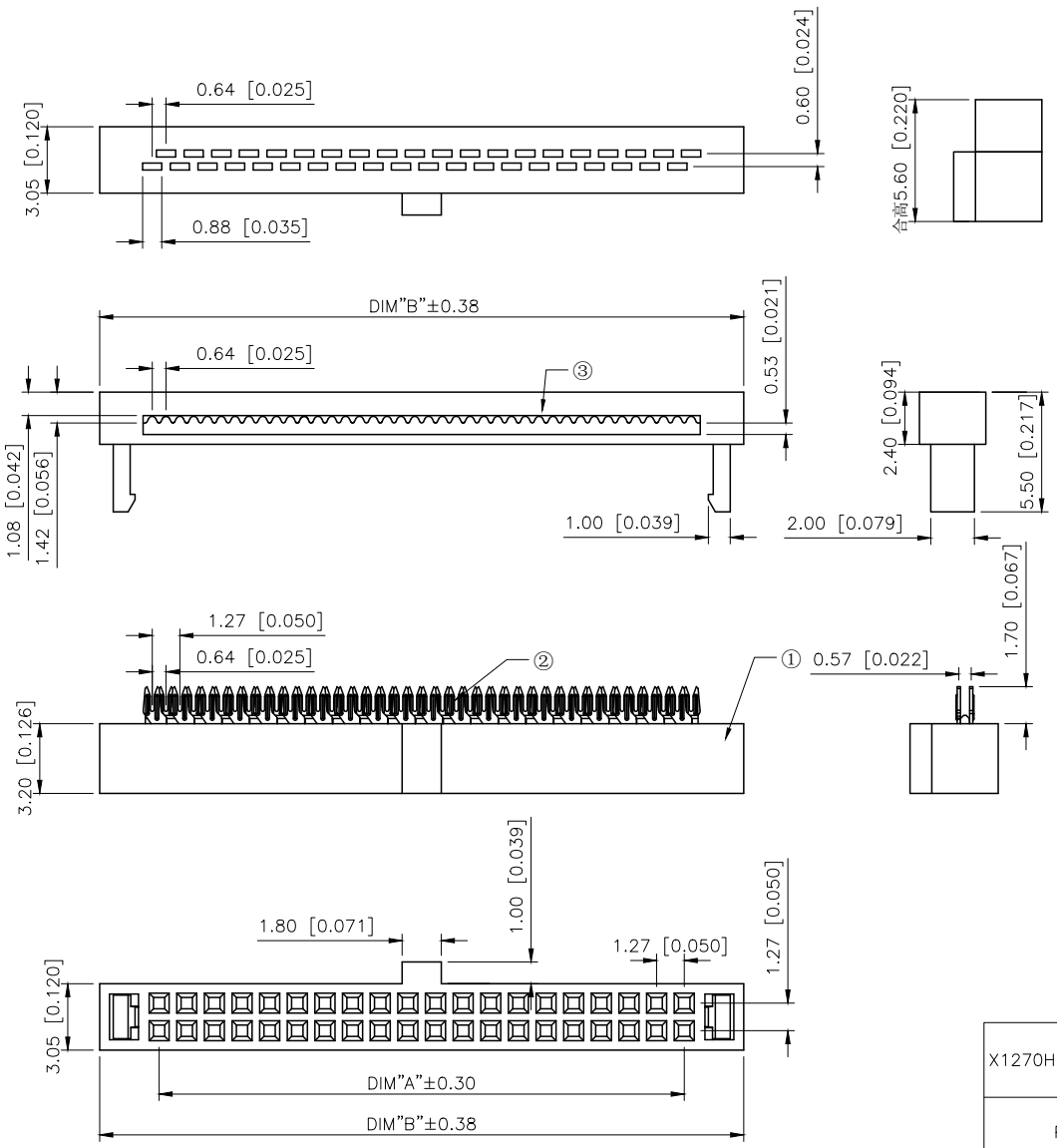

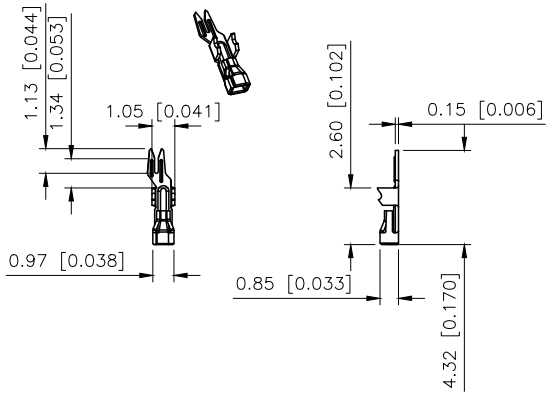

Specifications:
规格：
Voltage rating:250V AC/DC
额定电压：250V AC/DC
Current rating:1A AC/DC
额定电流：1A AC/DC
Withstanding voltage:500V AC/minute
耐受电压：500V AC/分钟
Temperature range:−40℃−+125℃
温度范围：−40℃−+125℃
Insulation resistance:≥100MΩ Min.
绝缘电阻：≥100MΩ
Contact resistance:≤20mΩ
接触电阻：≤20mΩ

PART NO.:

X1270 H 1−2xXX−PT V01
① ② ③ ④ ⑤ ⑥

①Series No
②Category:H−HSG
③1:Thicken
④Row No−Pin No:2xXX−2x03P~2x40P
⑤Material:PT−PBT UL94V−0
⑥Plating Category: V01−All Gold Flash

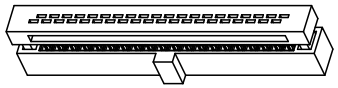

Poles	DIMENSION		Poles	DIMENSION	
	A	B		A	B
2x03	2.54	8.00	2x17	20.32	25.78
2x04	3.81	9.27	2x18	21.59	27.05
2x05	5.08	10.54	2x20	24.13	29.59
2x06	6.35	11.81	2x22	26.67	32.13
2x07	7.62	13.08	2x25	30.48	35.94
2x08	8.89	14.35	2x30	36.83	42.29
2x09	10.16	15.62	2x32	39.37	44.83
2x10	11.43	16.89	2x34	41.91	47.37
2x12	13.97	19.43	2x35	43.18	48.64
2x13	15.24	20.70	2x37	45.72	51.18
2x15	17.78	23.24	2x38	46.99	52.45
2x16	19.05	24.51	2x40	49.53	54.99

X1270H1−2xXX−PTV01	PBT UL 94V−0	Phosphor Bronze	Gold Flash	X1270W−A X1270W−C	XPD0.635−A30PXX−IDC	X1270HI−2xXX
PART NO	Material	Material(Pin And Solder Tabs)	Finish(Pin And Solder Tabs)	Suitible XKB Wafer	Suitible XKB flat cable	Suitible XKB DIP

AuGLAR	±5°
X.	±0.40
X.x	±0.30
X.xx	±0.20
X.xxx	±0.15
UNSPECIFIED TOLERAuCES	

XKB Connection 星坤

DESIGN	阿树	VIEW:	MODEL TYPE: 1.27mm BTB Style Connectors
CHECKED		UNIT: mm/in	PART NO.: X1270H1−2xXX−PTV01
APPROVED		SIZE: A4	DWG NO.:

XKB INDUSTRIAL PRECISION CO.,LIMITED

SCALE	PAGE	REVISION
N/A	1/1	A1