MATERIAL NUMBER	FINISH	HOLE
43178-1001	999	NOT USED
43178-1002	H901	NOT USED

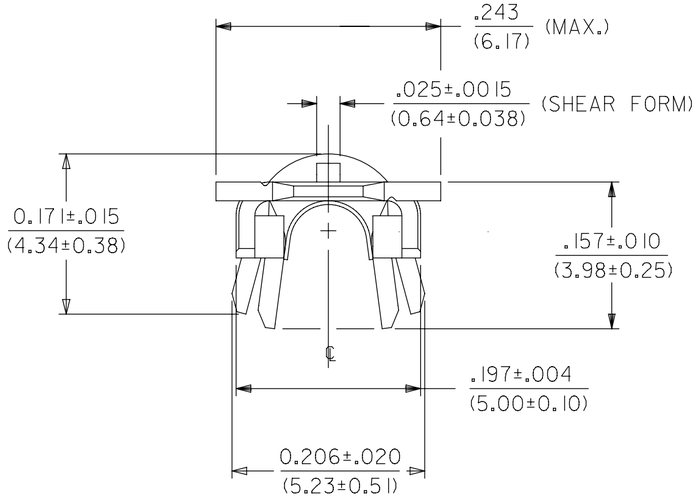

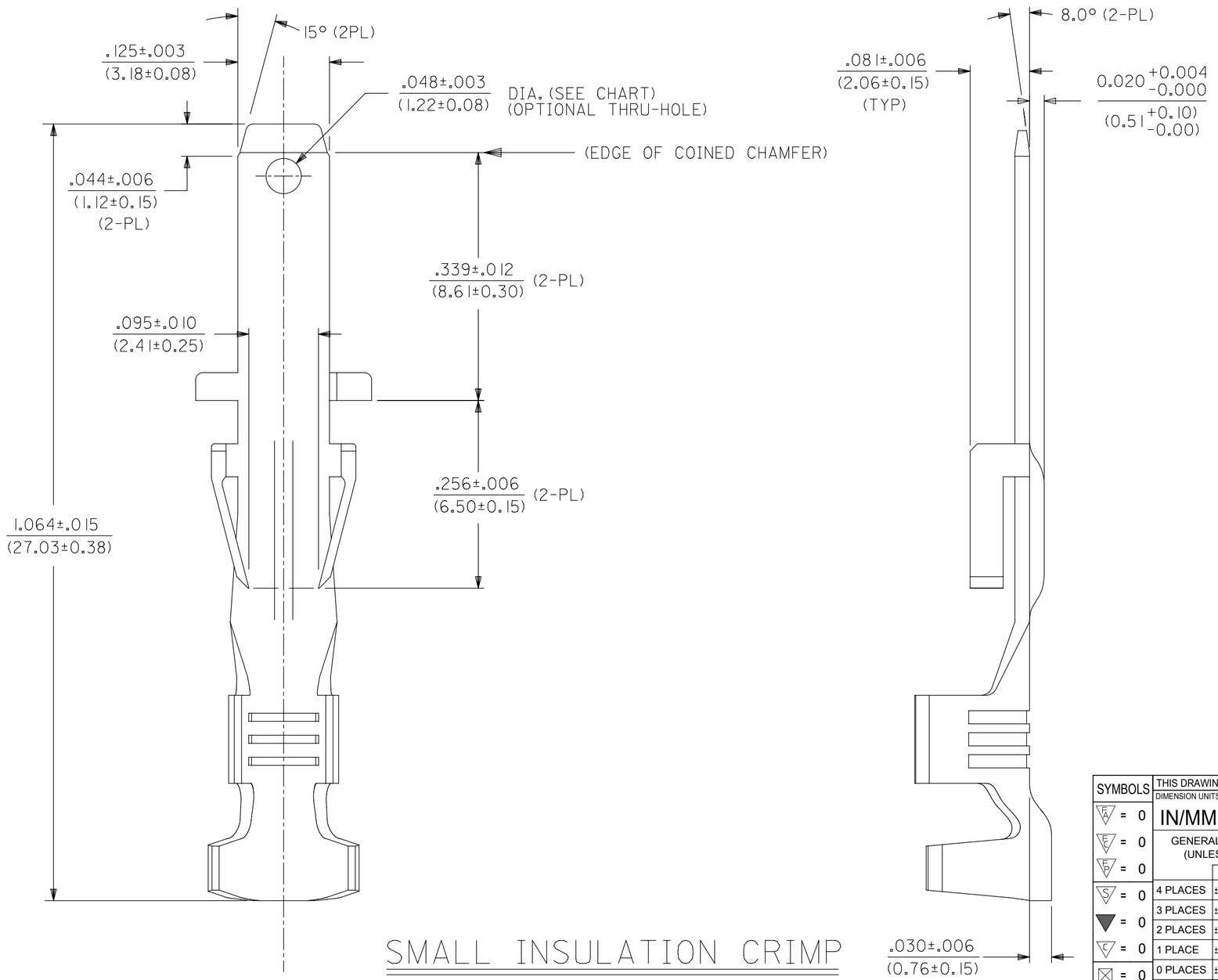

SMALL INSULATION CRIMP

NOTES:
1. MATERIAL: BRASS
2. FINISH:
   999 - UNPLATED
   H901 - 20 MICROINCH MIN. HOT TIN DIP
3. PRODUCT SPECIFICATION: PS-44441-9999
4. PACKAGING SPECIFICATION: 431780000-PK
5. TERMINAL FOR USE IN 43680 SERIES HOUSINGS
6. TERMINAL FOR USE WITH A SINGLE 18 AWG UL TYPE 1015 WIRE, HAVING A MAXIMUM INSULATION DIAMETER OF .130/(3.30).
7. PARTS CONFORM TO CLASS "B" REQUIREMENTS OF COSMETIC SPECIFICATIONS PS-45499-002

THIS DRAWING CONTAINS INFORMATION THAT IS PROPRIETARY TO MOLEX ELECTRONIC TECHNOLOGIES, LLC AND SHOULD NOT BE USED WITHOUT WRITTEN PERMISSION

SYMBOLS: FA = 0; FC = 0; FP = 0; S = 0; ▼ = 0; C = 0; ☒ = 0; ■ = 0; V = 0

DIMENSION UNITS: IN/MM — SCALE: 8:1

GENERAL TOLERANCES (UNLESS SPECIFIED)

	MM	INCH
4 PLACES	±	±
3 PLACES	±	± 0.01
2 PLACES	± 0.25	± 0.014
1 PLACE	± 0.35	±
0 PLACES	±	±
ANGULAR TOL	± 0.5 °	

DRAFT WHERE APPLICABLE MUST REMAIN WITHIN DIMENSIONS

CURRENT REV DESC: ADD NOTES

EC NO: 617584
DRWN: JEHRISMAN 2019/04/02
CHK'D: MKIPPER 2019/06/13
APPR: FSMITH 2019/06/18

INITIAL REVISION:
DRWN: KBP 1994/10/24
APPR: RAS 1994/10/24

THIRD ANGLE PROJECTION | DRAWING: C-SIZE | SERIES: 43178

molex

TERMINAL,CRIMP, MALE TAB
.125/(3.18) X .020/(0.51) SABRE - F.B.S. - T.P.A.

PRODUCT CUSTOMER DRAWING

DOCUMENT NUMBER	DOC TYPE	DOC PART	REVISION
SD-43178-1XXX	PSD	001	D2

MATERIAL NUMBER	CUSTOMER	SHEET NUMBER
SEE TABLE	WHIRLPOOL	1 OF 1

DOCUMENT STATUS	P1	RELEASE DATE	2019/06/18 16:00:31

FORMAT: Eng-lega-master-tb-prod-C
REVISION: D
DATE: 2018/01/18