MATERIALS AND FINISHES:

MCX PLUG R/A CONNECTOR:

BODY, CRIMP TUBE, CAP: BRASS
PLATED NICKEL

CENTER CONTACT: BRASS
PLATED GOLD

OUTER CONTACT: BERYLLIUM COPPER
PLATED GOLD

INSULATOR: PTFE

MHF® I LK CONNECTOR

CABLE: 1.37MM CABLE

HEAT SHRINK TUBE: PE

PERFORMANCE REQUIREMENTS

FREQUENCY RANGE: 0~6GHz
IMPEDANCE: 50 Ω
WITHSTAND VOLTAGE(AC): 350V @0.5mA
CONTINUITY: 100% TEST

PACKAGING BY PLASTIC BAG

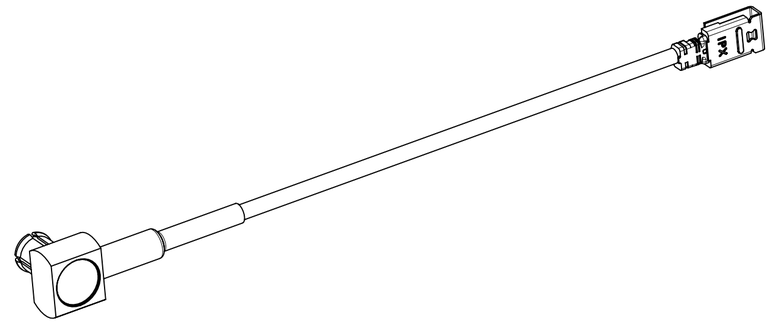

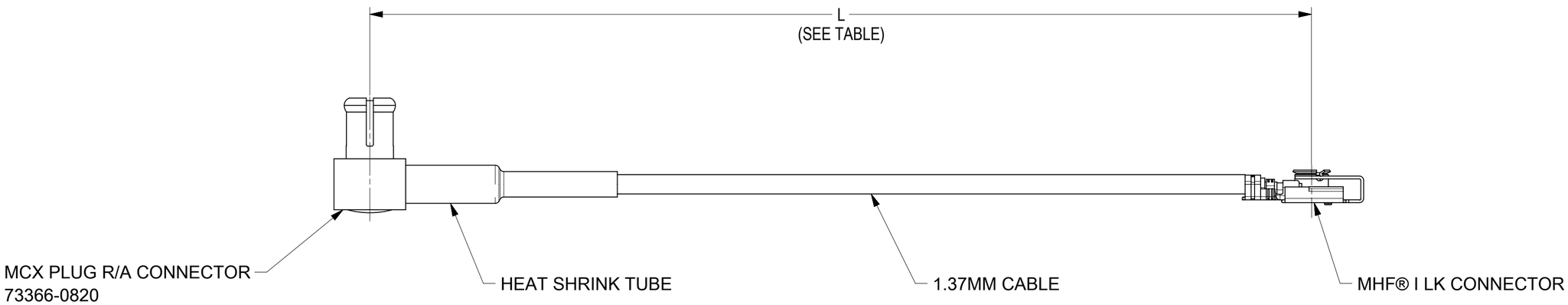

PART NO.	IN	MM
	L	
73230-6155	2.000±.118	50.80±3.00
73230-6154	4.000±.197	101.60±5.00
73230-6153	6.000±.197	152.40±5.00
73230-6152	8.000±.197	203.20±5.00
73230-6151	10.000±.197	254.00±5.00
73230-6150	12.008±.197	305.00±5.00

DOCUMENT STATUS	P1	RELEASE DATE	2023/07/13 01:49:56

FUNCTIONAL SYMBOLS
FA = 0
FC = 0
FP = 0
DIVISIONAL SYMBOLS

THIS DRAWING CONTAINS INFORMATION THAT IS PROPRIETARY TO MOLEX ELECTRONIC TECHNOLOGIES, LLC AND SHOULD NOT BE USED WITHOUT WRITTEN PERMISSION

DIMENSION UNITS	SCALE
MM/INCH	4:1

GENERAL TOLERANCES (UNLESS SPECIFIED)

ANGULAR TOL	± °
4 PLACES	±
3 PLACES	±
2 PLACES	±
1 PLACE	±
0 PLACES	±

DRAFT WHERE APPLICABLE MUST REMAIN WITHIN DIMENSIONS

CURRENT REV DESC: ADD NEW PN.73230-6151, -6152,-6153,-6154,-6155 PER EWR#: 15303-D.

EC NO: 756278
DRWN: YHUANG11 2023/07/07
CHK'D: JCHEN108 2023/07/12
APPR: LCHEN03 2023/07/13

INITIAL REVISION:
DRWN: YHUANG11 2022/07/20
APPR: LCHEN03 2022/09/22

THIRD ANGLE PROJECTION

DRAWING	SERIES
C-SIZE	73230

molex

CA, MCX PLUG R/A TO MHF® ? LK
WITH DIA 1.37MM CABLE,50 OHMS,EWR#: 15303-A

PRODUCT CUSTOMER DRAWING

DOCUMENT NUMBER	DOC TYPE	DOC PART	REVISION
732306150	PSD	000	A2

MATERIAL NUMBER	CUSTOMER	SHEET NUMBER
SEE TABLE	GENERAL MARKET	1 OF 1

FORMAT: master-tb-prod-C
REVISION: J
DATE: 2020/01/14