Jul.1.2024 Copyright 2024 HIROSE ELECTRIC CO., LTD. All Rights Reserved.
In case of consideration for using Automotive equipment / device which demand high reliability, kindly contact our sales window

	△數 COUNT	訂正事項 DESCRIPTION OF REVISIONS	擔當 B Y	檢圖 CHKD	年月日 DATE		△數 COUNT	訂正事項 DESCRIPTION OF REVISIONS	擔當 B Y	檢圖 CHKD	年月日 DATE
1	1	RE-6-1150	K.I.Y	L.S.M	18. 07. 04	△					. .
2	1	RE-6-1579	K.I.Y	L.S.M	20. 01. 23	△					. .
△					. .	△					. .

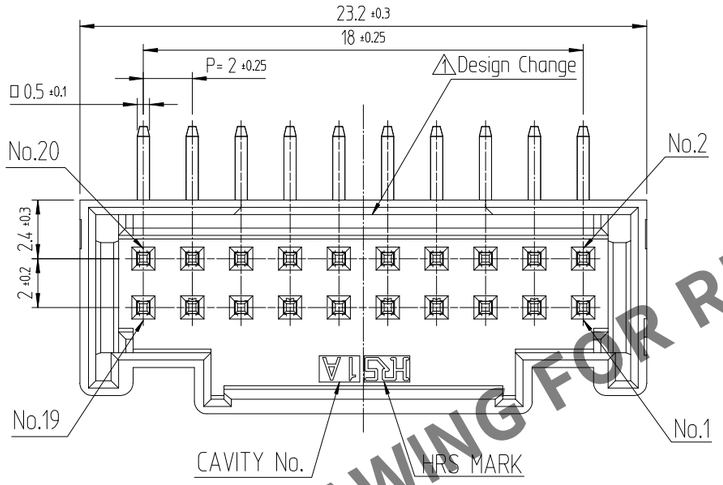

HRS DRAWING FOR REFERENCE

RECOMMENDED LAND PATTERN (FREE)
(PCB THICKNESS t=1.6mm)

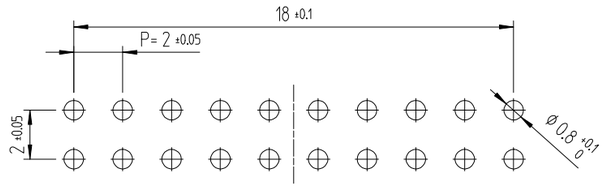

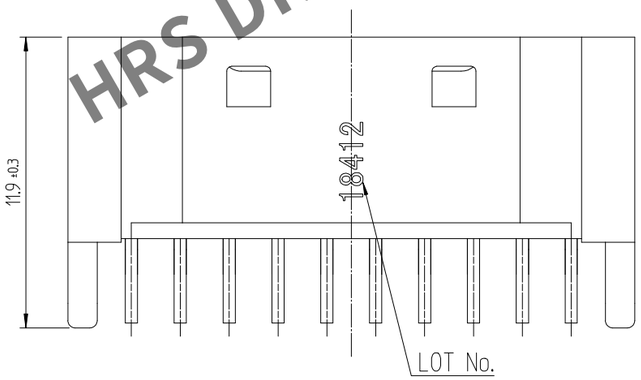

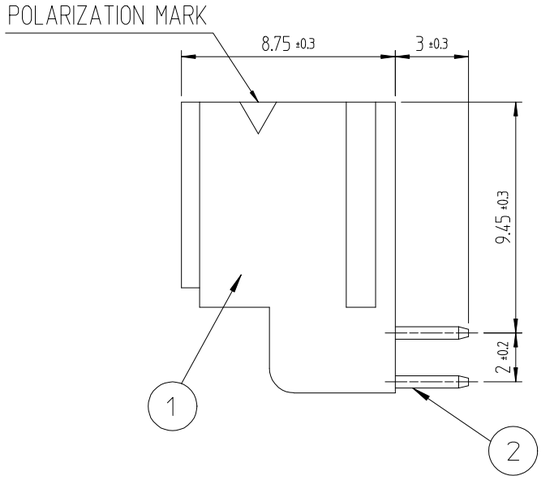

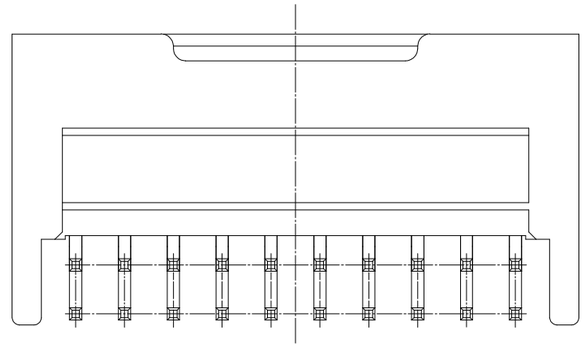

ENGAGEMENT FIGURE (2:1)

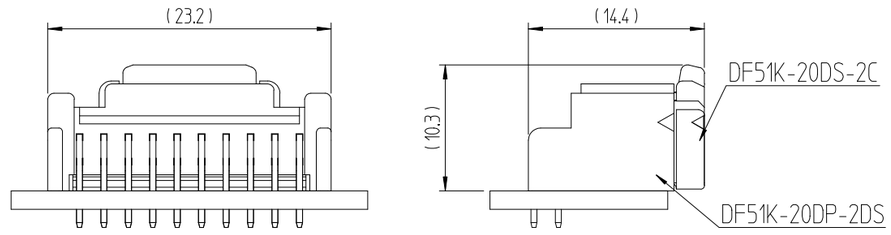

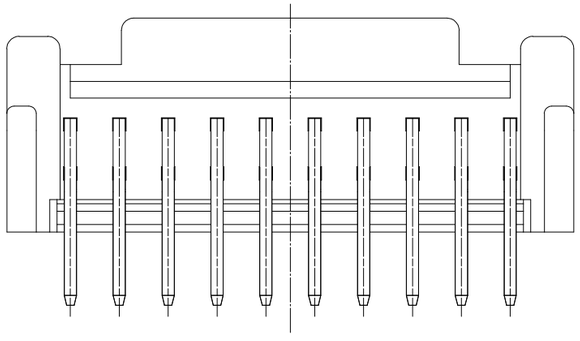

NOTE 1. 1PACK CONTAINS 130PCS.
2. ( )DIMENSIONS ARE ONLY REFERENCE.
△3 3. UL(File No. E132750) AUTHORIZATION ARTICLE.
C-UL(File No. E132750) AUTHORIZATION ARTICLE.

NO.	MATERIAL	FINISH,REMARKS
1	PBT	UL94V-0, BLACK
2	BRASS	GOLD PLATING 0.1μm MIN, OVER NICKEL 0.5μm MIN

CODE NO. (OLD)	DRAWN	DESIGNED	CHECKED	APPROVED	RELEASED
	CHOI 18.03.02 J.S	CHOI 18.03.02 J.S	LIM 18.03.02 S.M	KANG 18.03.02 T.S	ENG 20. 02. 12 DEPT

SCALE 4:1
UNITS mm

DRAWING NO. EDC3-632484
HRS HIROSE KOREA CO.,LTD.

PART NO. DF51K-20DP-2DS (805)
CODE NO. CL 6652-0050-7-805
1/1