CND-tek
磁联达

CHIP LAN FILTER

Meets IEEE 802.3 & ANSI X3.263 Standards.
Designed For 1G BASE-T Applications,Surface Mount Type.
Operating Temperature Range: -40 °C to +85°C.
Insulation voltage 125Vdc
RoHS Compliant.

Part Number	Electrical Specifications@25°C									
	Inductance 100KHz 0.1V (uH Min) 1-2to3-4	Capacitance 100K 0.1V (pF Max) 1-2-3 to 4-5-6	DCR (Ω Max)	Insertion Loss (dB Max)	Return Loss (dB Min) 1-20M	Return Loss (dB Min) 20-100M	Rated Current mA Max	RatedVolt (Vdc)	Common mode Impedance (ohm ±25%@100M) 3-4 to 6-5	IR M(Ω Min)
CM3216D10-601	55	30	3.2	-1.0	-20	-20+10*log10(f/20)	200	50	600	10

MECHANICAL

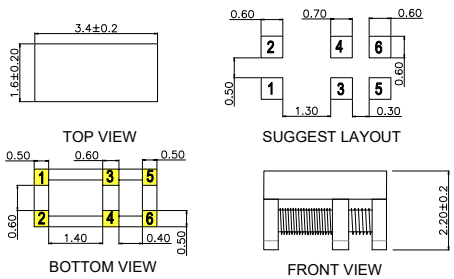

SCHEMATICS

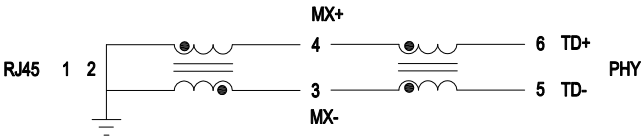

Unless otherwise specified all tolerances are:±0.1mm

TAPING AND PACKING

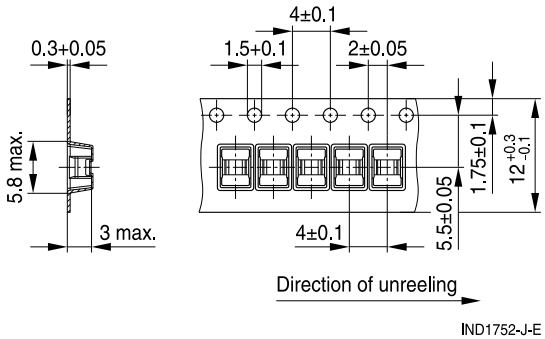

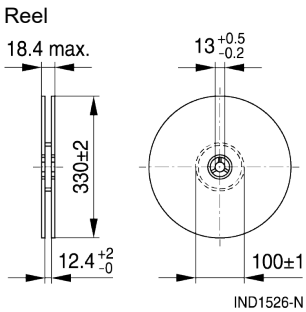

Dimensions in mm

Quantity (pcs) :
7000 PCS PER REEL
3REELS PER CARTON
21000PCS PER CARTON

Shenzhen magnetic Lianda Electronics Co., LTD

Address: 505, West Block, No. 221, Niucheng Road, Niucheng Village, Baiwang Community, Xili Street, Nanshan District, Shenzhen
Tel:0755-27652992 29016433 E-mail: sales1@cd-tek.com Website:www.cd-tek.com