SPECIFICATION

1. Rating ： DC 30V 0.5A；
2. Contact resistance：≤30mΩ；
3. Insulation resistance：≥100MΩ (DC250V)；
4. Withstand voltage：500VAC ；
5. Insertion and extraction force：3-30N;
6. life test：5,000 cycles。

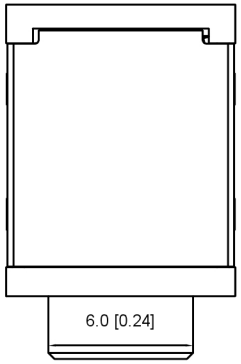

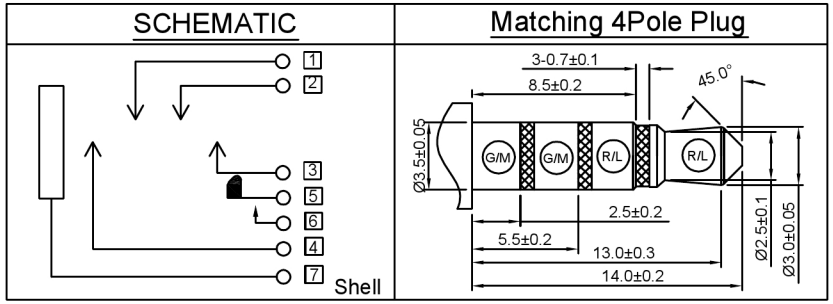

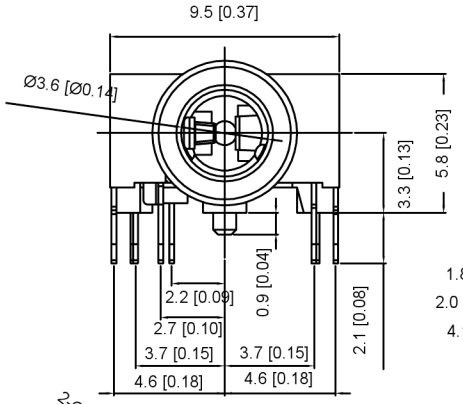

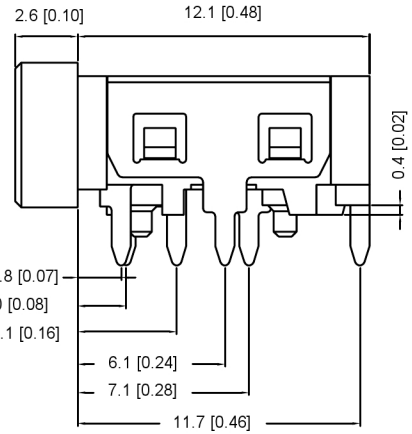

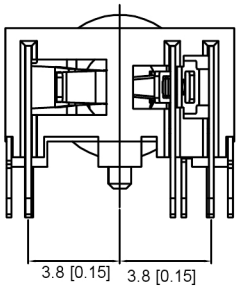

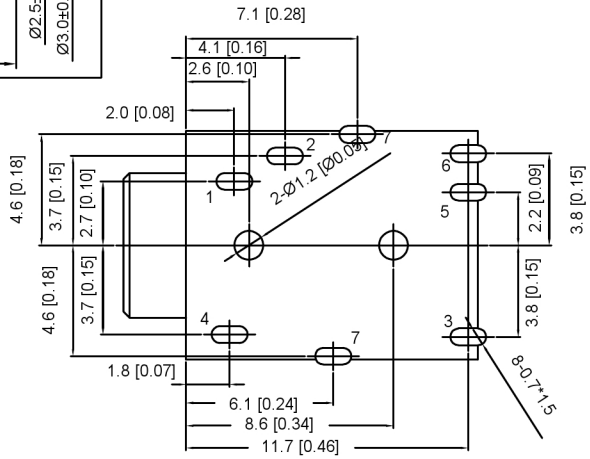

P.C.B LAYOUT TOP VIEW

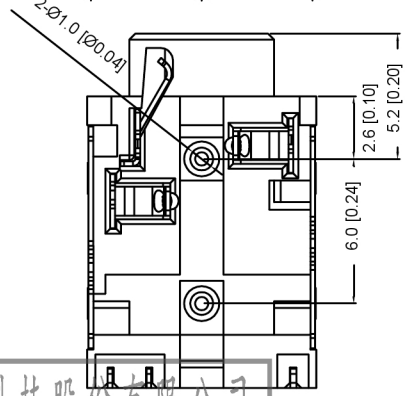

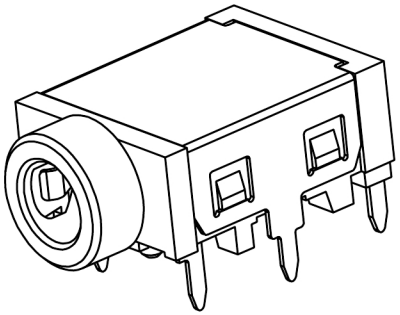

NO.	DESCRIPTION	QTY	MATERIAL	PLATING
9	HOUSING	1	PA9T	Black
8	INSULATER	1	PA9T	Black
7	SHELL	1	SUS301 T=0.20mm	NI-Plating
6	TERMINAL-6	1	COPPER ALLOY T=0.20mm	GOLD FLASH ALL. OVER Ni40U"
5	TERMINAL-5	1	COPPER ALLOY T=0.20mm	
4	TERMINAL-4	1	COPPER ALLOY T=0.20mm	
3	TERMINAL-3	1	COPPER ALLOY T=0.25mm	
2	TERMINAL-2	1	COPPER ALLOY T=0.20mm	
1	TERMINAL-1	1	COPPER ALLOY T=0.20mm	

广东星坤科技股份有限公司
文 件 工 程 章

MARK	DESCRIPTION	DATE	REVISED	APPROVED
Δx				
Δx				
Δx				

REVISIONS

UNSPECIFIED TOLERANCES	
ANGLAR	±5°
L≤ 4	±0.2
4<L≤ 16	±0.3
16<L≤ 63	±0.4
L> 63	±0.5

www.helloxkb.com www.helloxkb.cn www.xk-dg.cn

XKB INDUSTRIAL PRECISION CO.,LIMITED

DSND		SCALE: N/A	MODEL TYPE: 3.5 PHONE JACK
DWN		VIEW:	PART NO.: PJ-3401
CHKD		UNIT: mm/in	DWG NO.:
APPD		SIZE: A4	

WEIGHT	SHEET	REVISIC
	1/1	A0