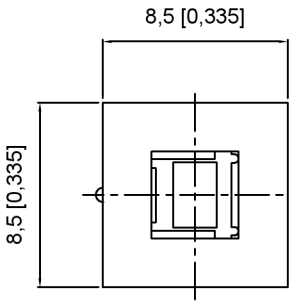

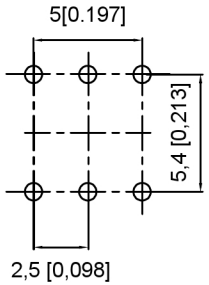

P.C.B LAYOUT
BOTTOM VIEW

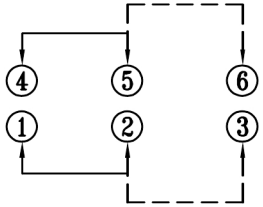

SCHEMATIC (NON-SHORTING)

FEATURES

- Light operating force.
- Long term low contact resistance.
- Momentary or latching operation.
- Short stroke 2.0mm to latch.
- Compact spacing on PCB of 8.5mm.

SPECIFICATIONS

1.ELECTRICAL

● Contact rating	0.1A, 30VDC
● Contact resistance	50mWMax.
● Insulation resistance	100MWMin. at 250VDC
● Dielectric strength	250VAC Min. for 60 sec.

2.MECHANICAL AND ENVIRONMENTAL

● Temperature rating	Operating: -15℃ to +55 ℃ Storage: -25 ℃ to +65 ℃
● Operation force	160±80gf
● Stroke	Lock Stroke: 2.0±0.2mm Full Stroke: 2.5±0.2mm
● Operating life	full load: $1x10^4$ cycles no load: $1x10^5$ cycles
● Contact form	DPDT

PAPT NO	XKB8585-X-140
OPERATION	W:NO LOCK Z:LOCK

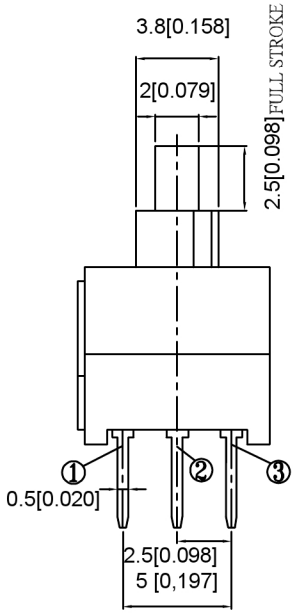

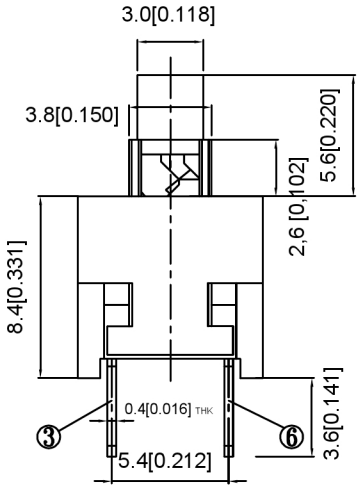

ITEM	PAPT NAMF	TER,NO	QTY	MATERIAL	FINISHING	REMARK
⑦	Contact	——	2	Phosphor bronze	Plating silvering	——
⑥	Terminal	——	6	Brass	Plating silvering	——
⑤	Spring	——	1	Sus	Natural	——
④	Base	——	1	Pbt		——
③	Crochet Needle	——	1	Sus	Natural	——
②	Cover	——	1	Pom		——
①	Keystake	——	1	Pom		——

广东星坤科技股份有限公司
文件工程章

MARK	DESCRIPTION	DATE	REVISED	APPROVED
Δx				
Δx				
Δx				

REVISIONS

UNSPECIFIED TOLERANCES	
ANGLAR	±5°
L≤ 4	±0.2
4<L≤ 16	±0.3
16<L≤ 63	±0.4
L> 63	±0.5

www.helloxkb.com www.helloxkb.cn www.xk-dg.cn

XKB INDUSTRIAL PRECISION CO.,LIMITED

DSND		SCALE: N/A	MODEL TYPE: KEY SWITCH
DWN		VIEW:	PART NO.: XKB8585-X-140
CHKD		UNIT: mm/in	DWG NO.:
APPD		SIZE: A4	

WEIGHT	SHEET	REVISIC
	1/1	A0